ENG

NucleOSS™

T6 TorQ Surgical Kit

Surgical Manual

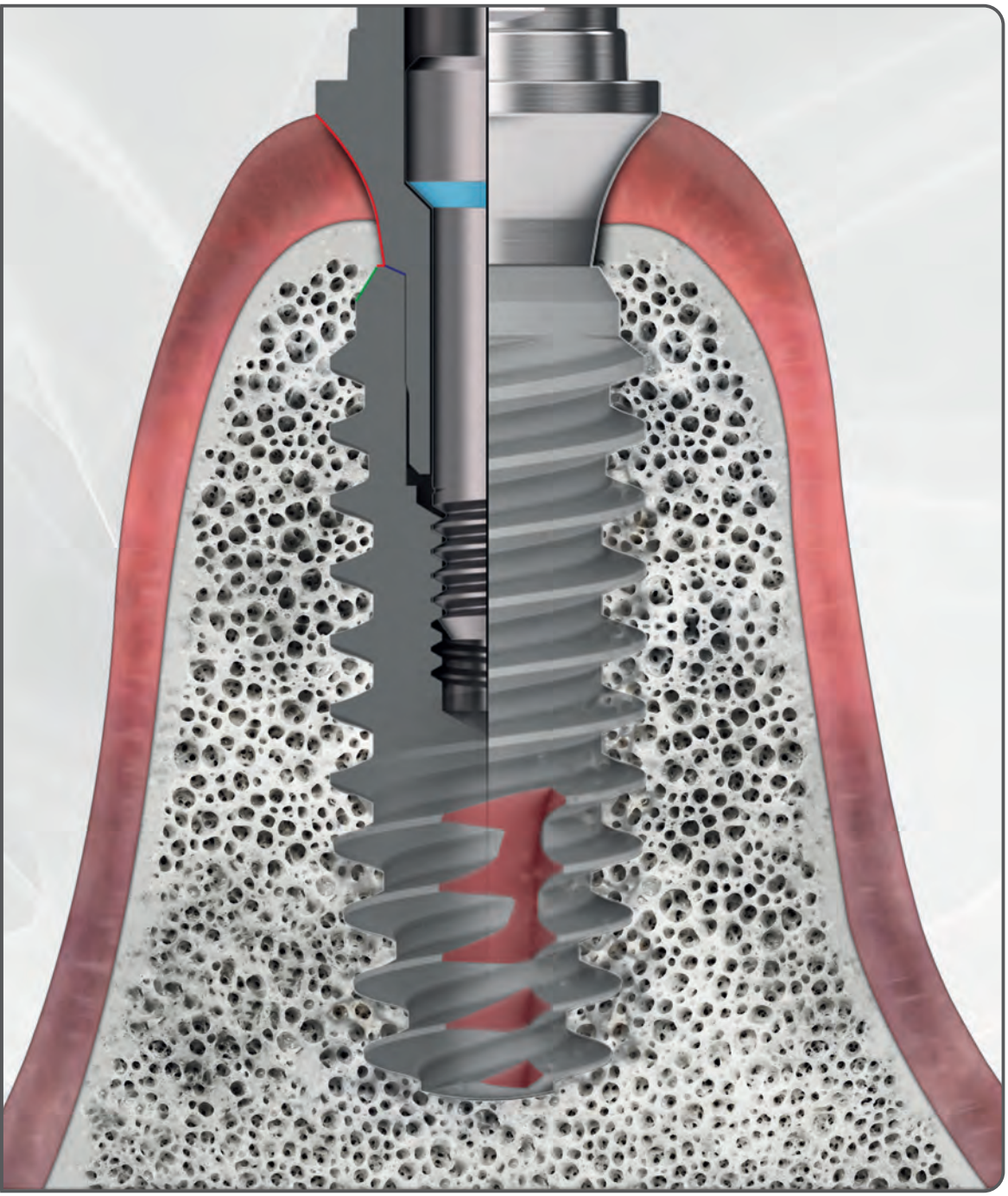

Document Name : SM.02 T6 TorQ Surgical Manual

Publication Date : 15.06.2026

Revision No. : 00

Revision Date :

nucleoss
.com

NucleOSS™

T6 torQ

T6 TorQ Surgical Kit

SURGICAL MANUAL



This user manual includes instructions for use that are recommended for surgical applications of NucleOSS Dental Implant system. Treatment and surgical planning should be performed on the basis of clinical data and evaluations of physician in relation to the case.

Şanlılar Tıbbi Cihazlar Med. Kim. San. ve Tic. A.Ş.
info@nucleoss.com

Dear Clinician

Şanlılar A.Ş. , the manufacturer of the NucleOSS brand, was established in Izmir in 2001 and produced Turkey's first dental implant. In the light of meticulous R&D studies and knowledge, we continue to produce more innovative and user-friendly products for you with the excitement of the first day, by adopting world-class sensitive production protocols. In order to increase the quality of the operation and to enable more comfortable treatment processes, we design and develop quality and innovative products, and offer them to you.

We established the TFI (Together for Implantology) academy in order to create a platform where dentists can share their ideas, studies and information about implants within an ethical framework and thus contribute to the development of the field of implantology. As NucleOSS, we adopt reliable, quality and customer-oriented production with transparent, ethical and principled management.

We work more and more every day within the framework of our open to change and innovative approach, which is the first condition of progress and growth. We design new products, constantly change and develop with our understanding of management and production that values people.

We are growing thanks to your support... We are enchanting...



Salih ŞANLI

PRESIDENT

Contents

NucleOSS™

Topics	Page No.
T6TorQ Implant - The Recital Begins	2
Features of the NucleOSS T6 TorQ Implant	3
Diameter and Length Options	4
Implant Package Contents and Label	5
Transfer and Placement	6
Pre-Operational Procedures	7
Drill Protocol for T6 TorQ Implants	8
Drill Protocol for T6 TorQ Ø 3.5 Implants	9
Drill Protocol for T6 TorQ Ø 4.0 Implants	11
Drill Protocol for T6 TorQ Ø 4.5 Implants	12
Drill Protocol for T6 TorQ Ø 5.0 Implants	13
Drill Protocol for T6 TorQ Ø 6.0 Implants	14
Drill Protocol for T6 TorQ Implants (L 6.5 mm)	15
Technical Specifications of T6 TorQ Surgical Kit	16
T6 TorQ Surgical Kit	17
Porint Drill and Drill Extender	18
Round and Lindemann Drill	19
Pilot and Final Drills	20
Hard Bone and Countersink Drills	21
T6 TorQ - Drill Compatibility	22
T6 TorQ - Drill Compatibility (L 6.5 mm)	23
Pilot Paralel Pins	24
Angled Pins (17° - 30°)	25
Bone Profiler Drill	26
T6 Implant Transfer and Tightening Parts	27
Hex Drivers	28
Ball(O-ring) and Screw-Retained Tightening Parts	29
Adapter	30
Slim**ex** Implant Carrying/Tightening Parts	31
Depth Gauge	32
Screw Driver	33
Ratchet	34
Tightening - Torque Values	35
Maintenance and Cleaning of Surgical Hand Tools	37

NucleOSS™

T6 torq

Your new solution partner for immediate and early laoding in all bone

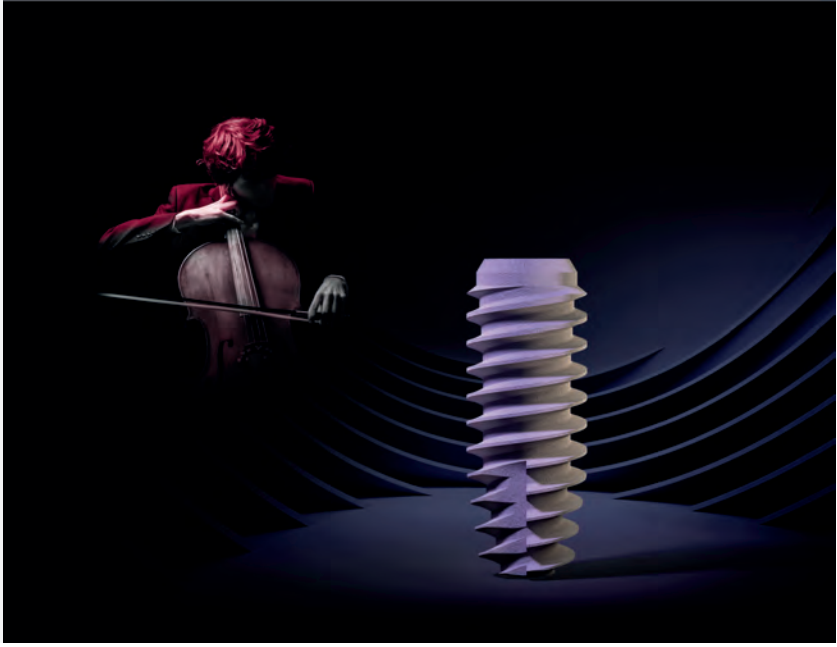

Bone Level Implant

the recital **begins**

NucleOSS offers the T6 torq implant, specially developed with 20 years of R&D experience and the support of specialist physicians for immediate and early loading to the use of physicians. T6 Torq implant provides a strong mechanical attachment to the bone tissue thanks to its incisive and deep tooth profile.

It provides high ISQ values required for immediate and early loading in all bone types. Thanks to its common internal structure, it maintains its proven strength with the T6 Standard implant and uses all T6 superstructures in common.

- Cemented Solutions



- Threaded Solutions



- Overdenture Prosthesis Solutions



Common Superstructures

Common connection for all T6 implant diameters....



Offers solutions for all indications with a wide range of superstructure options...

- Digital CAD-CAM Solutions



- Customized Solutions



- Temporary Parts (PEEK+Titanium)



NucleOSS™ | Digital Library

3shape | exocad | dental wings A Straumann Group Brand

Digital libraries for ti-base and multi-unit ti-base abutments, usable in CAD/CAM digital solutions, are available in exocad, 3Shape, and dentalwings programs.

HEX ve NO-HEX

Hex options for single tooth treatments

No-Hex options for multiple tooth treatments

NO-HEX



HEX

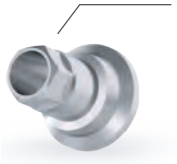

Features of the NucleOSS T6 TorQ Implant

In addition, the approved Maxicell surface offers safe and high survival rate on T6 torq implants.
Our unique surgical set meets all the needs of our physicians and supports the surgical and prosthetic processes in a sensitive, comfortable and trouble-free manner.

STANDARDS STRAIGHT ABUTMENT

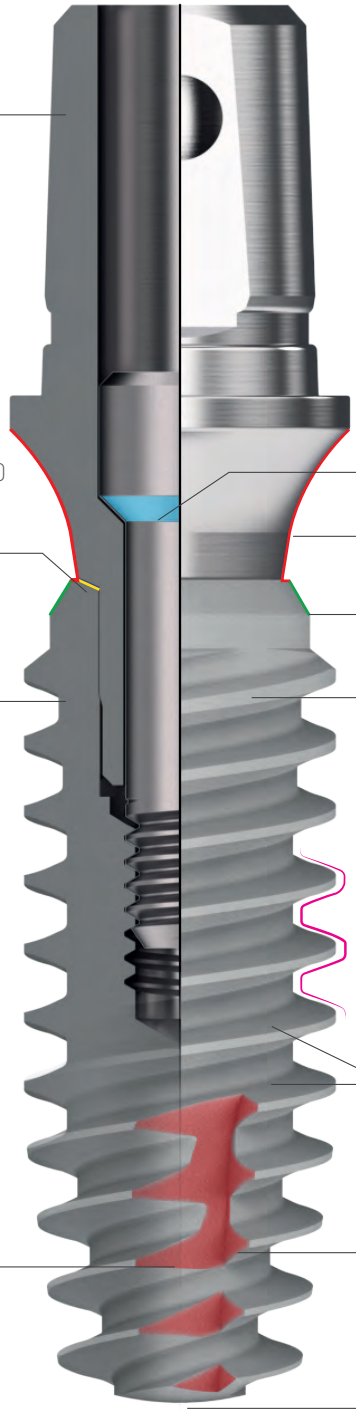

Angled contact zone (20°):
It ensures that the force (side/vertical) to which abutment is subjected to is evenly distributed over the entire body. It also prevents abutment micro-movements in side forces.

Screw-abutment connection
surface preventing screw loosening.

Effective platform switch

Angled surface for more bone

Strong Side Walls

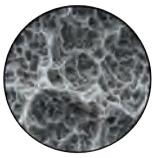

maxicell surface

Approved clean and hydrophilic unique surface

Cutting V Form

Thanks to the double thread and screw pitch, the implant is placed in the prepared socket **faster and in less number of turns.**

Bone aggregation area

Cutting surface

Rounded apex surface



Thanks to their hexagonal internal connection, dual component **NucleOSS** implants allow the superstructures to be placed in **6 different indexes with 60° rotation.**

Diameter and Length Options



Cover Screw	>	T6 32150
Length		**Product Code**
8 mm	>	TRQ 3508
10 mm	>	TRQ 3510
12 mm	>	TRQ 3512
14 mm	>	TRQ 3514
17 mm	>	TRQ 3517



Cover Screw	>	T6 32151
Length		**Product Code**
6.5 mm	>	TRQ 50065
8 mm	>	TRQ 5008
10 mm	>	TRQ 5010
12 mm	>	TRQ 5012
14 mm	>	TRQ 5014
17 mm	>	TRQ 5017



Cover Screw	>	T6 32158
Length		**Product Code**
6.5 mm	>	TRQ 40065
8 mm	>	TRQ 4008
10 mm	>	TRQ 4010
12 mm	>	TRQ 4012
14 mm	>	TRQ 4014
17 mm	>	TRQ 4017



Cover Screw	>	T6 32152
Length		**Product Code**
6.5 mm	>	TRQ 60065
8 mm	>	TRQ 6008
10 mm	>	TRQ 6010
12 mm	>	TRQ 6012



Cover Screw	>	T6 32157
Length		**Product Code**
6.5 mm	>	TRQ 45065
8 mm	>	TRQ 4508
10 mm	>	TRQ 4510
12 mm	>	TRQ 4512
14 mm	>	TRQ 4514
17 mm	>	TRQ 4517

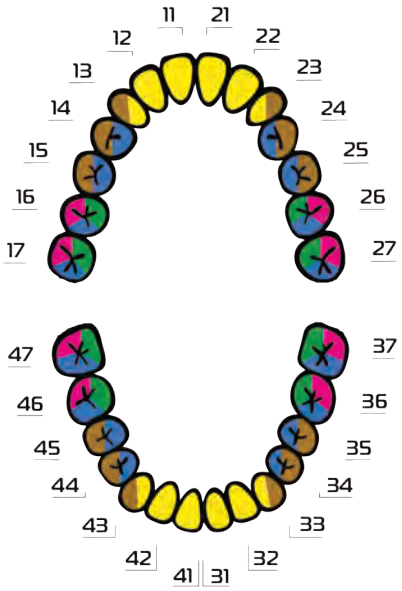

Diameter & Length Selection Suggestions

The figure on the right shows the recommended areas of use according to the diameters of the T6 Bone Level Implant. In order to determine the treatment and select the implant, clinician should evaluate the patient, the case, and the intended final restoration prior to surgery. Using outside the specified areas is at the clinician's discretion and responsibility.

Implant Package Contents and Label

NucleOSS T6 TorQ implants are supplied in a Tyvek sterile, leak-proof tube, including a cover screw.



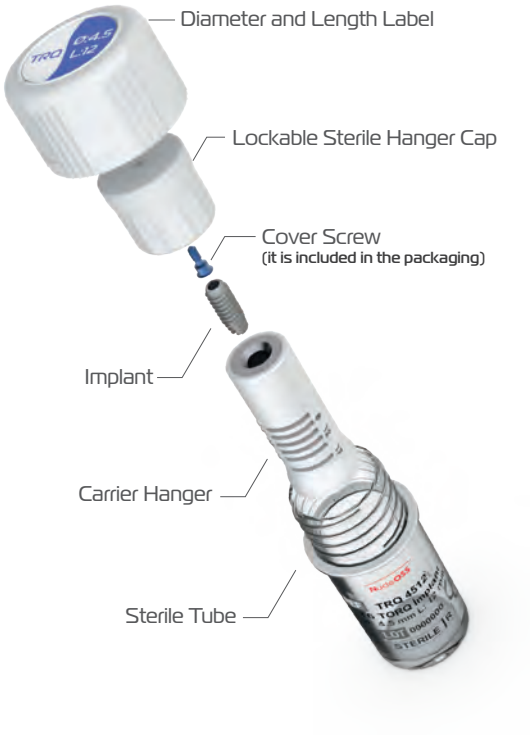

Product Label Informations



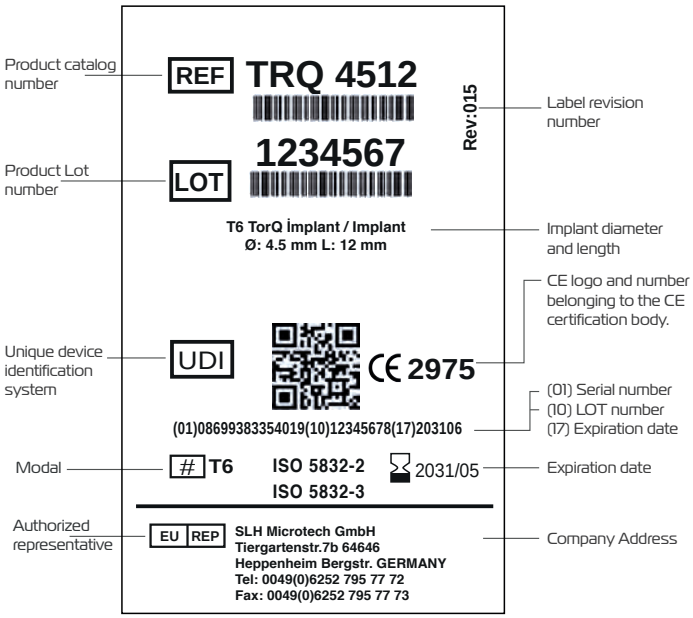

*Labels contain common information.

STERILE R Gamma sterilization	Instructions for use please read carefully	Legal Production	Don't reuse	MR Conditional	Don't reuse

MD Medical Device	Warnings	Do not re-sterilize	Rx only Prescription only	Double sterile barrier system	Humidity range	Temperature range

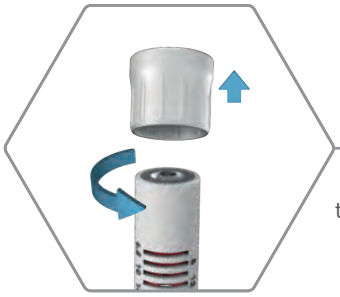

The tube cover is removed, and the carrier is placed on a sterile drape.

Once the carrier cover is opened, the carrier should not be tilted more than 60 degrees.
Otherwise, the implant may fall out.

Micromotor

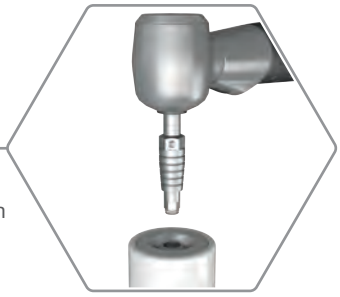

Screwdriver

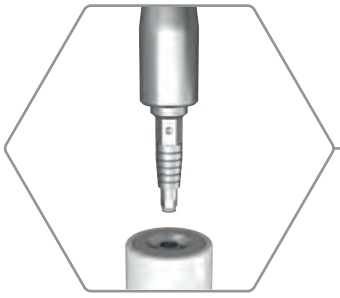

Ratchet



Transfer and Fixation Attachment

To transfer the implant from the plastic carrier to the oral cavity, the implant insertion tool must be precisely positioned into the internal hex of the implant.

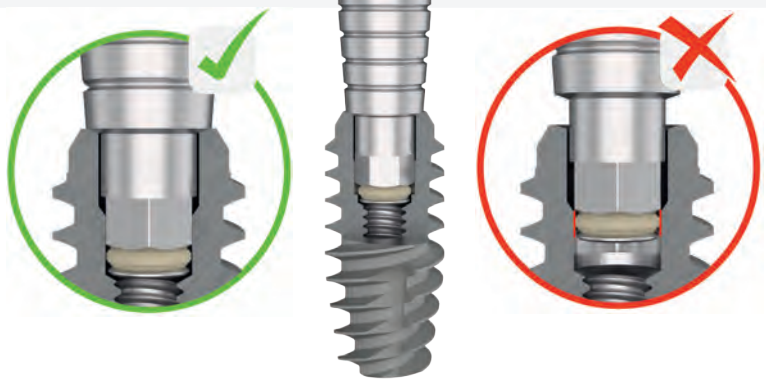

CORRECT

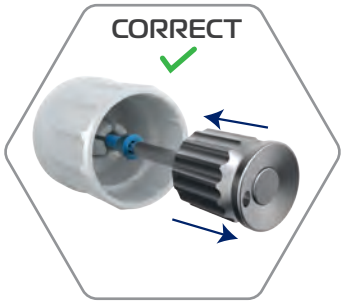

Transfering the cover screw

To transfer the cover screw from the tube, fully insert the hex driver into the cover screw and pull it straight back along the same axis.

INCORRECT



Pre-Operational Procedures

Pre-Operational Examination

General evaluation of the patient should be made with clinical and oral radiographic tests, and mucous membrane, jaw morphology, dental history, prosthetic history and oral dysfunctional signs should be carefully examined before the operation. Radiographic analyzes should be used in the examination of bone topography.

In addition to clinical examination, preliminary radiographic evaluations are a basis for determining the patient's suitability for implant treatment.

If the patient is found suitable for treatment, a more detailed clinical examination should be performed for the treatment area and the countervailing area. Any pathological condition detected in the jaw should be treated before the implant operation.

Pre-Operation Planning

While performing the planning before the operation, the final prosthetic treatment should be considered and planning should be done accordingly. First of all, the intended final prosthetic treatment should be planned, and the type and number of implants should be decided accordingly. The prosthetic material to be used should be chosed according to the region where the implant will be placed. While planning the treatment, all stages from the healing process to the final restoration should be evaluated with the intended final treatment in mind

Articulator-mounted models provide information about the connection between the tooth and the jaw. Wax modeling from the edentulous area makes an important contribution to correct planning. The most appropriate treatment planning can be achieved by examining the occlusal picture and evaluating factors such as load distribution and preferred slots for implants.

The Transparent Radiographic Implant Guide, showing the magnified dimensions of the implants at different rates, will contribute to the most appropriate selection of the point, direction and length of implant.

During the surgical operation, factors such as the primary stability of the implant, single-stage or two-stage surgery, immediate implant placement after extraction, and expected recovery time before loading should be considered as well as the intended final treatment approach.

The recommended healing period before loading is 12 weeks, unless there is a different medical decision taken by the physician.

In each case, the loading time for each implant should be determined by the clinician by carefully examining bone quality, quantity, density, primary stability, restoration style, and loading conditions.

Before starting the treatment, hole process should be clearly explained to the patient by specifying the results of the examination performed before the operation, the required treatment method, the expected result after the treatment, the required care and possible risks.

Bone Classification

Since the thickness and density of the bones of every patient vary, implant placement and surgery also varies for each case. According to the case data identified at the examination, the appropriate route should be followed for loading and implant surgery. Therefore, the NucleOSS surgical set and protocol were prepared taking into account these functional needs.

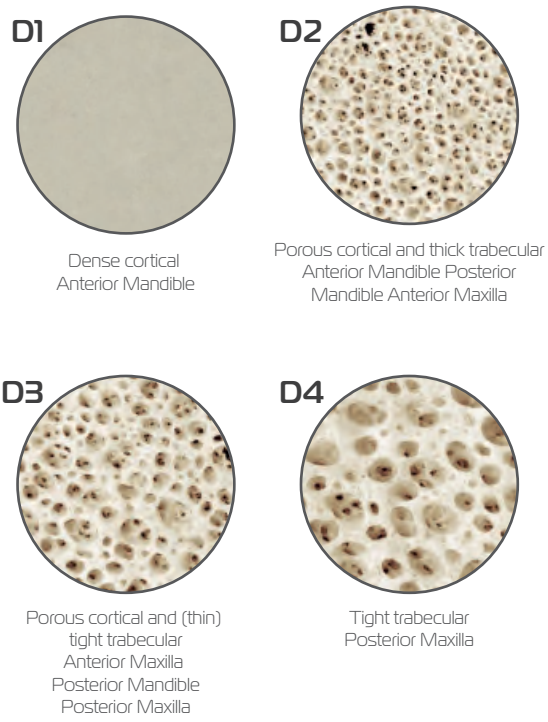

D1: Dense cortical
Anterior Mandible

D2: Porous cortical and thick trabecular
Anterior Mandible Posterior
Mandible Anterior Maxilla

D3: Porous cortical and (thin)
tight trabecular
Anterior Maxilla
Posterior Mandible
Posterior Maxilla

D4: Tight trabecular
Posterior Maxilla

The NucleOSS Dental Implant System has been developed considering the natural oral anatomy and the intended final prosthetic restoration.

Positions of implants are recommended based on crown-implant compatibility. However, while deciding on the placement of the implant, the size and shape of the implant, soft tissue healing, support required for the intended final restoration, bone volume, and connection to the neighbor tooth should be considered.

Based on mechanical considerations, it is always recommended to use the largest diameter implant possible. This recommendation should be especially taken into account for the rear areas where the loading forces are higher.

⚠

In all cases, loading conditions and the intended final prosthetic restoration should be considered when planning implant surgery and determining the number of implants.

Drill Protocol for T6 TorQ Implants

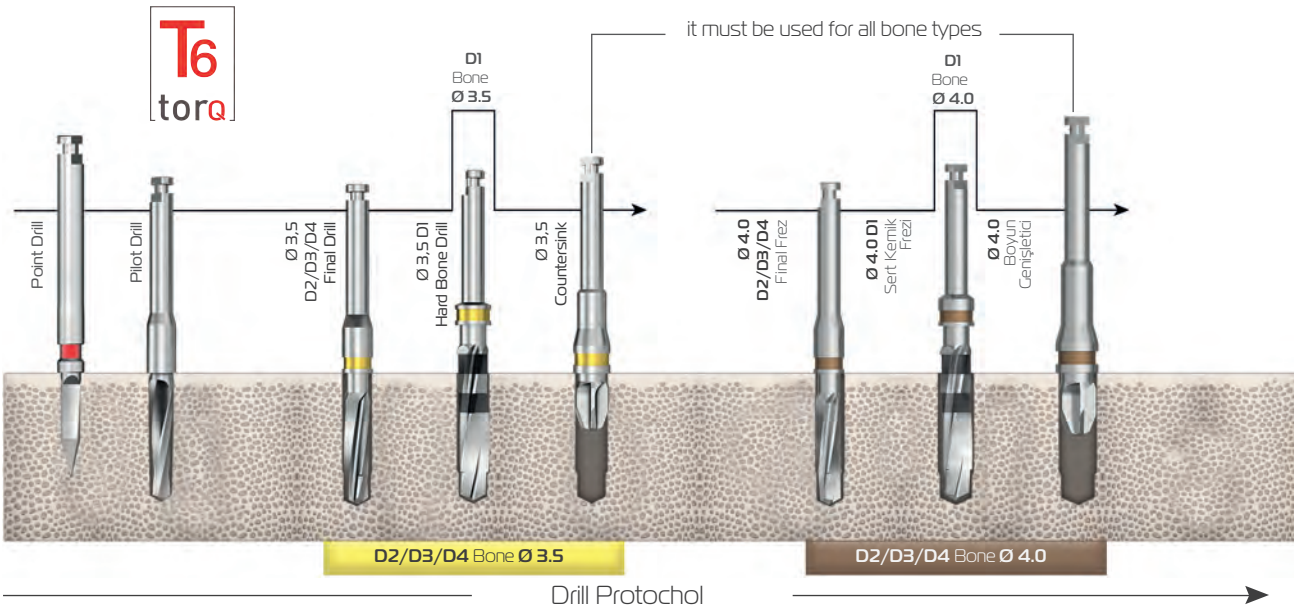

Preparation of the Implant Socket

Step 1 : After planning the T6 torq implant or implants to be used in the patient's mouth, drilling is performed with a point drill to mark or to determine the drill slot axis.

Caution : The point drill makes a slot with a length of 14 mm and a diameter of Ø 2.10 mm.

Step 2 : Pilot drills are designed with stoppers for each implant size. The use of pilot drills in accordance with the implant size in the milling protocol provides a controlled surgery by preventing the other drills from going deeper.

Step 3 : The position and axis are checked and the drill protocol is continued according to the suitable socket implant diameter. Final drills are equipped with stoppers for all sizes.

The slot is opened up to the stopper by selecting the final drill suitable for the size of the implant to be slotted. The slot is gradually enlarged using the previous diameter drill until the final diameter of the selected implant is reached.

*According to the bone density (in D1/D2 type bones), the slot is enlarged with a hard bone drill.

Caution: The hard bone drill is used to expand the slot after the standard final drill, using it as a final just after the previous diameter drill may damage the bone and the drill.

Finally, the slot preparation is completed by using a countersink drill to prevent jamming in the neck area.

The drills should be operated with coolant at a maximum of 800 rpm.

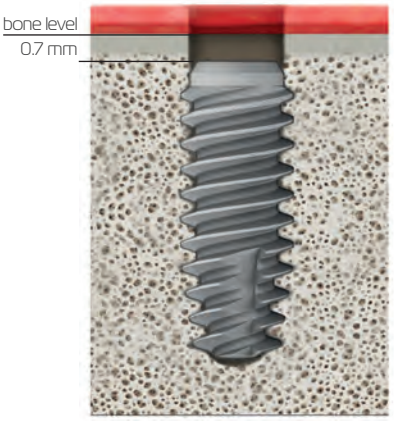

The depth of the socket opened by the surgical drill in the bone is 0.7 mm longer than the implant length to increase healthy bone formation in the neck area

Note: For T6 standard short (L:6.5 mm) implants only, this depth is 0.5 mm longer than the implant length

Bone level should be considered in surgical planning and practice.

Drill Protocol for T6 TorQ Implants

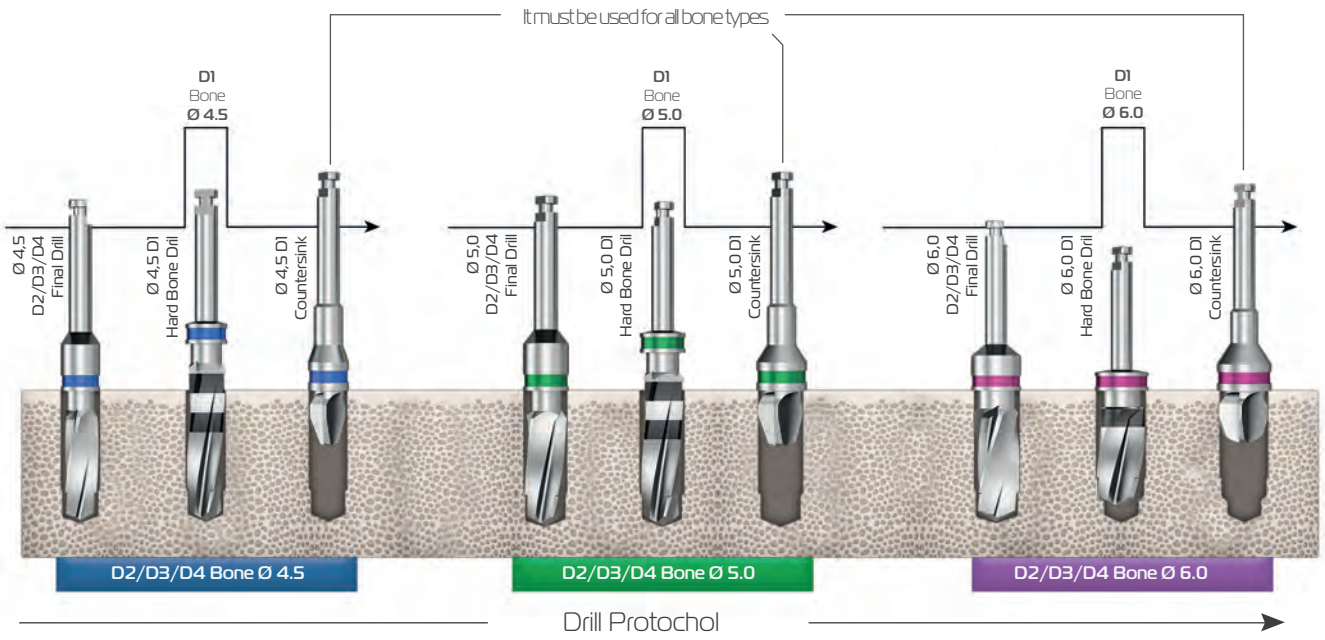

Drill Protocol for T6 TorQ Ø 3.5 Implants



Drill protocol for Ø 3.5 - 10 mm T6 TorQ implants,

The following drill protocol shows the drilling procedure for T6 TorQ Ø 3.5 implants according to soft and hard bone types.

For soft bone types, only the pilot and final drill lengths differ for 8, 10, 12, 14, and 17 mm implants. Implant socket preparation should be performed according to these drill protocols.

*The point mill is the first drill tool that must be used in all drill protocols.
*Implants should be placed into the implant socket with the help of a transfer&tightening parts.
*For 17 mm implants, a hard bone mill is used as the final milling tool for all bone types (D1/D2/D3/D4).

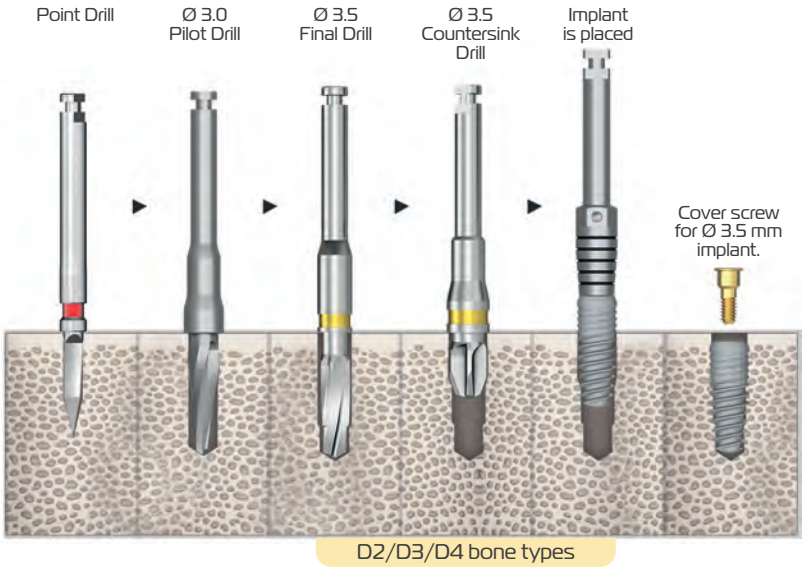

D2/D3/D4 bone types

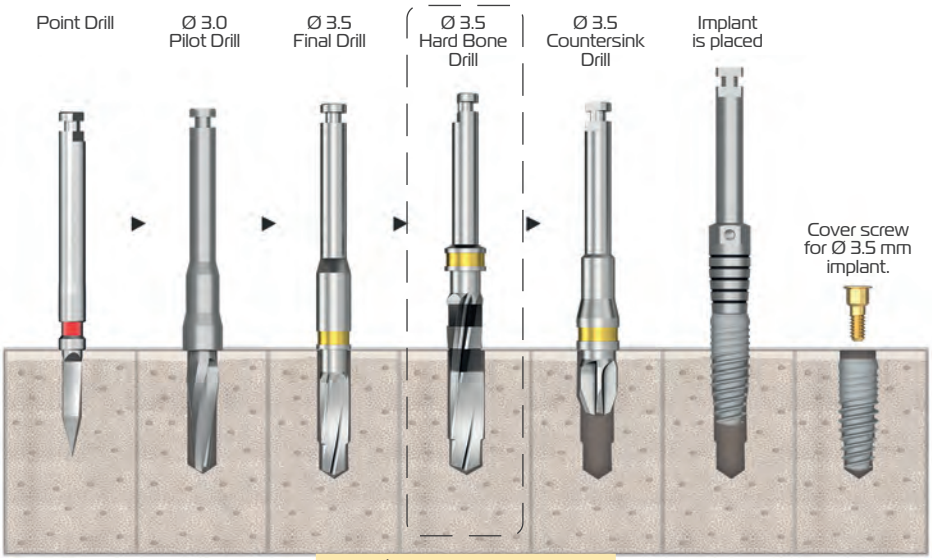

D1/D2 hard bone types

Drill Protocol for T6 TorQ Ø 4.0 Implants



Drill protocol for Ø 4.0 - 10 mm T6 TorQ implants,

The following drill protocol shows the drilling procedure for T6 TorQ Ø 4.1 implants according to soft and hard bone types.

For soft bone types, only the pilot and final drill lengths differ for 8, 10, 12, 14, and 17 mm implants.
Implant socket preparation should be performed according to these drill protocols.

*The point mill is the first drill tool that must be used in all drill protocols.
*Implants should be placed into the implant socket with the help of a transfer&tightening parts.
*For 17 mm implants, a hard bone mill is used as the final milling tool for all bone types (D1/D2/D3/D4).
*The drill protocol is different for L: 6.5 mm implants.

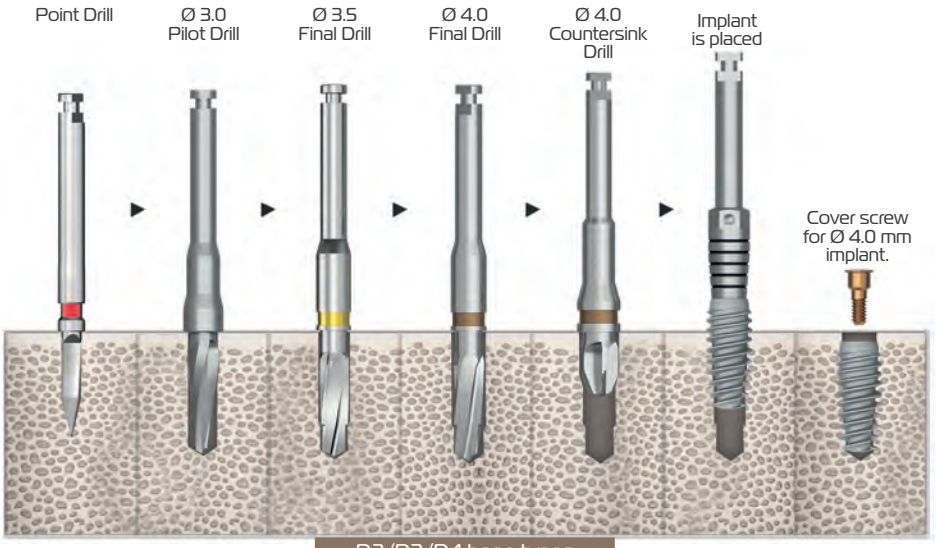

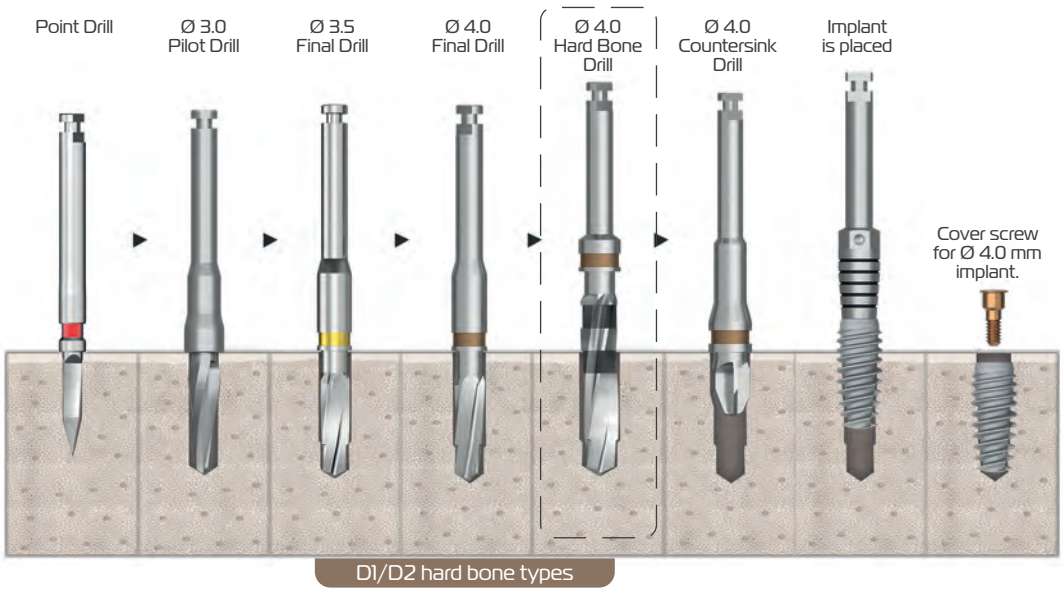

Drill Protocol for T6 TorQ Ø 4.5 Implants



Drill protocol for Ø 4.5 - 10 mm T6 TorQ implants,

The following drill protocol shows the drilling procedure for T6 TorQ Ø 4.5 implants according to soft and hard bone types.

For soft bone types, only the pilot and final drill lengths differ for 8, 10, 12, 14, and 17 mm implants.
Implant socket preparation should be performed according to these drill protocols.

*The point mill is the first drill tool that must be used in all drill protocols.
*Implants should be placed into the implant socket with the help of a transfer&tightening parts.
*For 17 mm implants, a hard bone mill is used as the final milling tool for all bone types (D1/D2/D3/D4).
*The drill protocol is different for L: 6.5 mm implants.

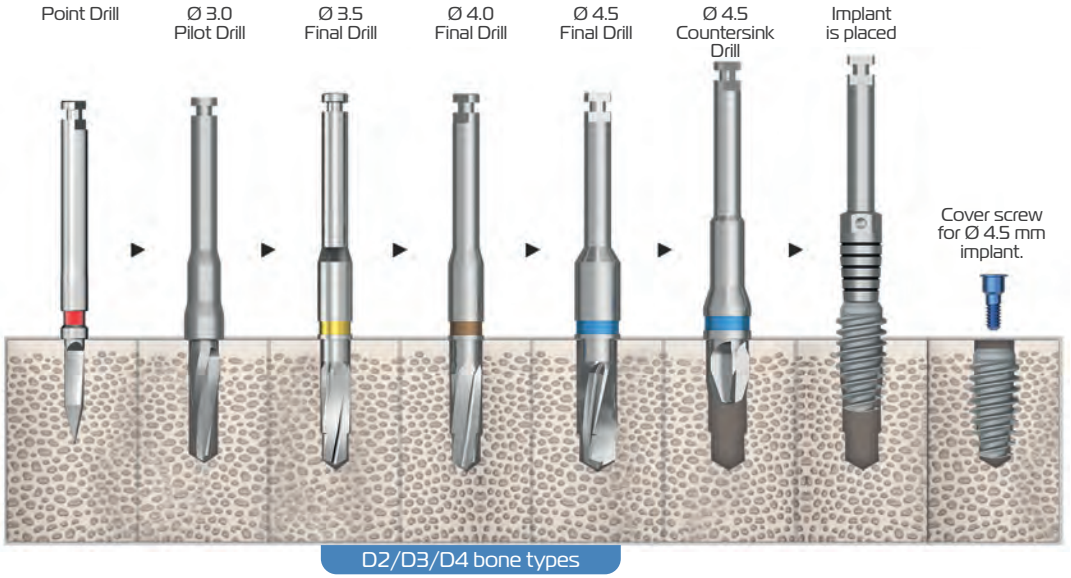

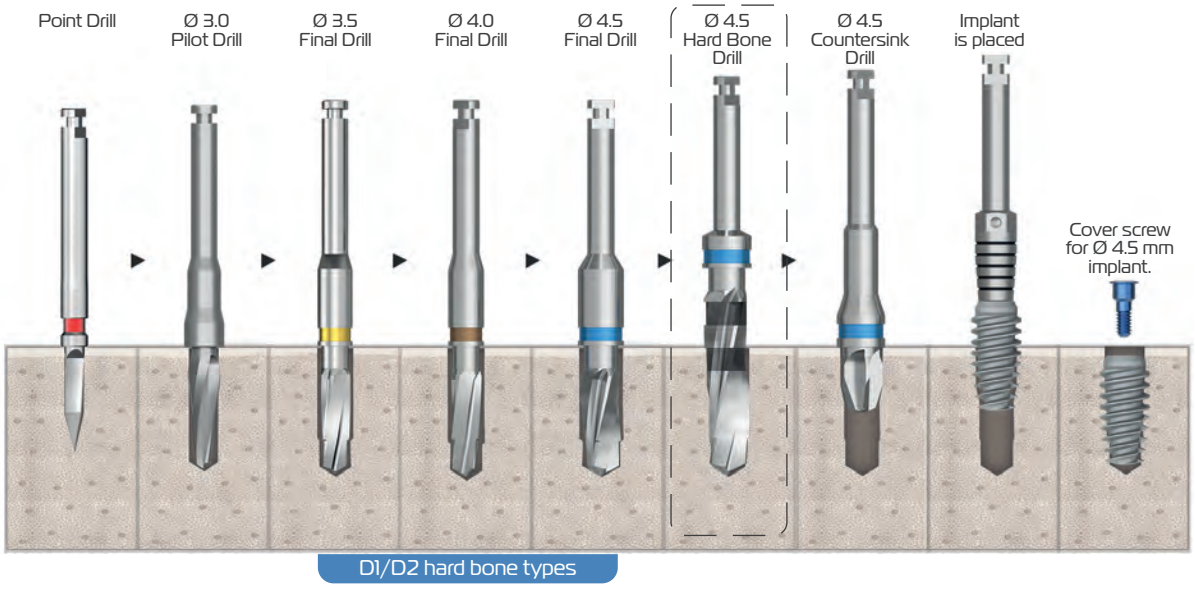

Drill Protocol for T6 TorQ Ø 5.0 Implants



Drill protocol for Ø 5.0 - 10 mm T6 TorQ implants,

The following drill protocol shows the drilling procedure for T6 TorQ Ø 5.0 implants according to soft and hard bone types.

For soft bone types, only the pilot and final drill lengths differ for 8, 10, 12, 14, and 17 mm implants.
Implant socket preparation should be performed according to these drill protocols.

*The point mill is the first drill tool that must be used in all drill protocols.
*Implants should be placed into the implant socket with the help of a transfer&tightening parts.
*For 17 mm implants, a hard bone mill is used as the final milling tool for all bone types (D1/D2/D3/D4).
*The drill protocol is different for L: 6.5 mm implants.

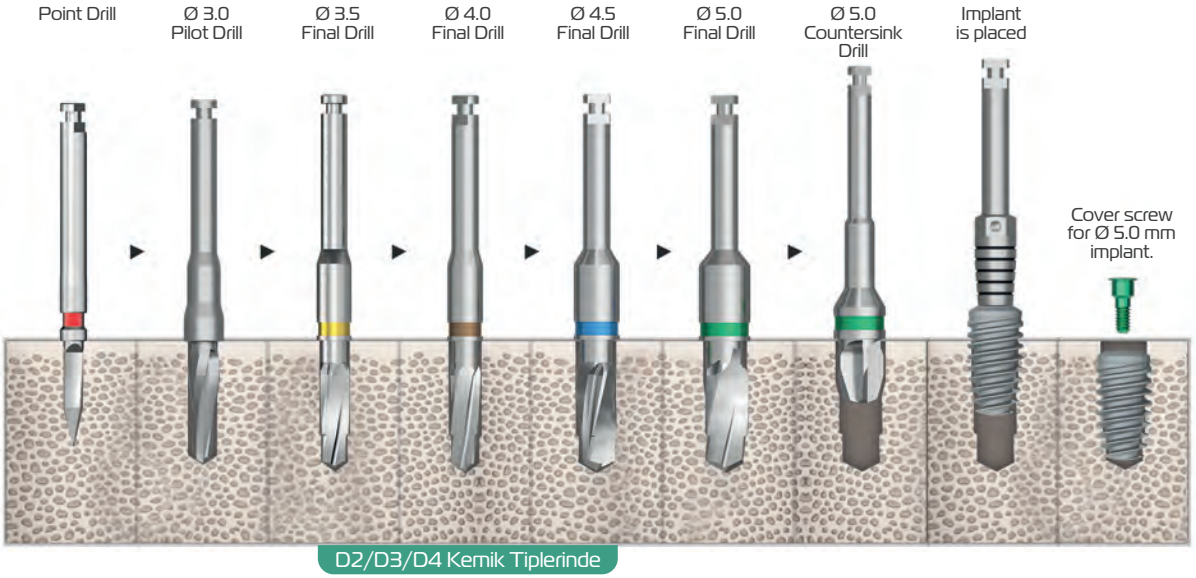

D2/D3/D4 Kemik Tiplerinde

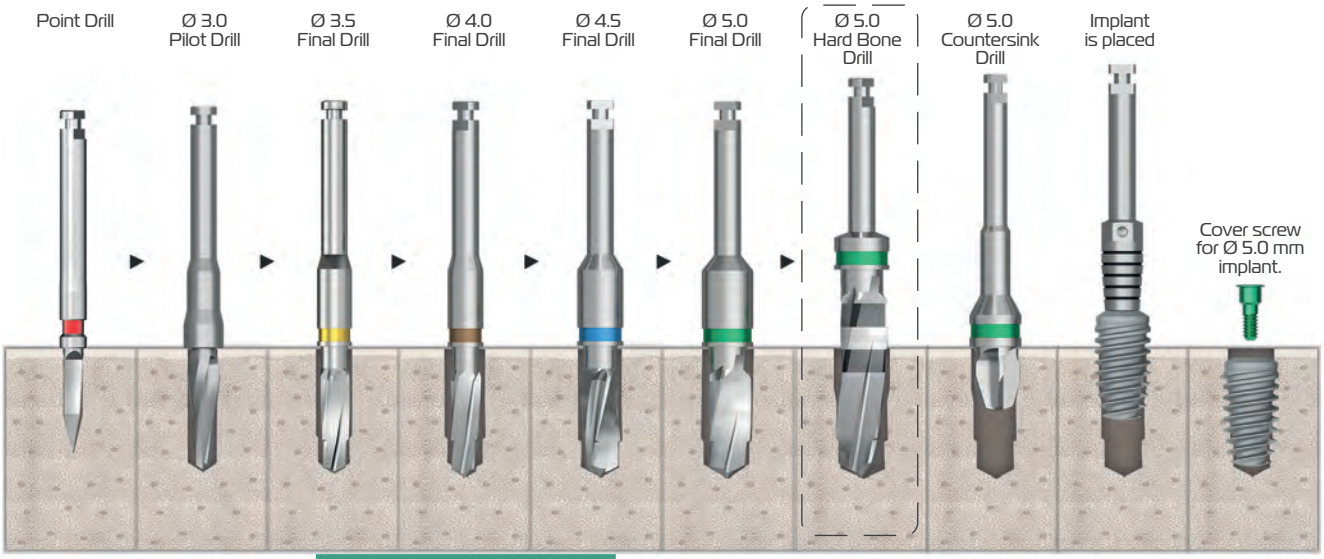

D1/D2 Sert Kemik Tiplerinde

Drill Protocol for T6 TorQ Ø 6.0 Implants

T6 TorQ Ø 6.0 mm implants



Drill protocol for Ø 6.0 - 10 mm T6 TorQ implants,

The following drill protocol shows the drilling procedure for T6 TorQ Ø 6.0 implants according to soft and hard bone types.

For soft bone types, only the pilot and final drill lengths differ for 8, 10, 12, 14, and 17 mm implants.
Implant socket preparation should be performed according to these drill protocols.

*The point mill is the first drill tool that must be used in all drill protocols.
*Implants should be placed into the implant socket with the help of a transfer&tightening parts.
*For 17 mm implants, a hard bone mill is used as the final milling tool for all bone types (D1/D2/D3/D4).
*The drill protocol is different for L: 6.5 mm implants.

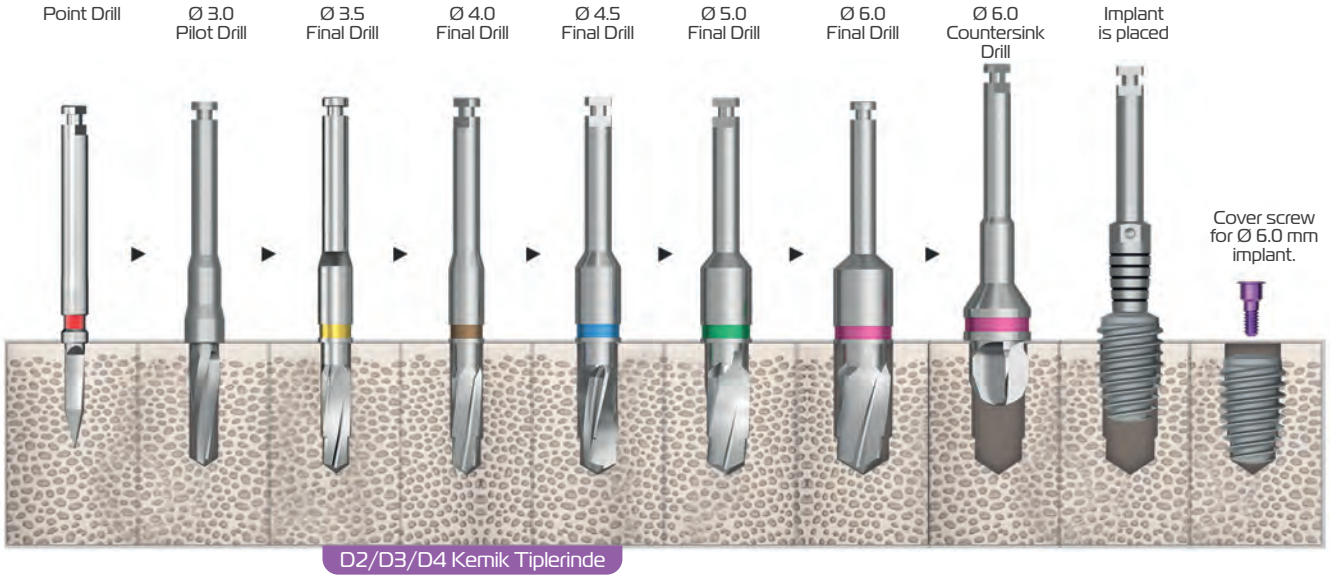

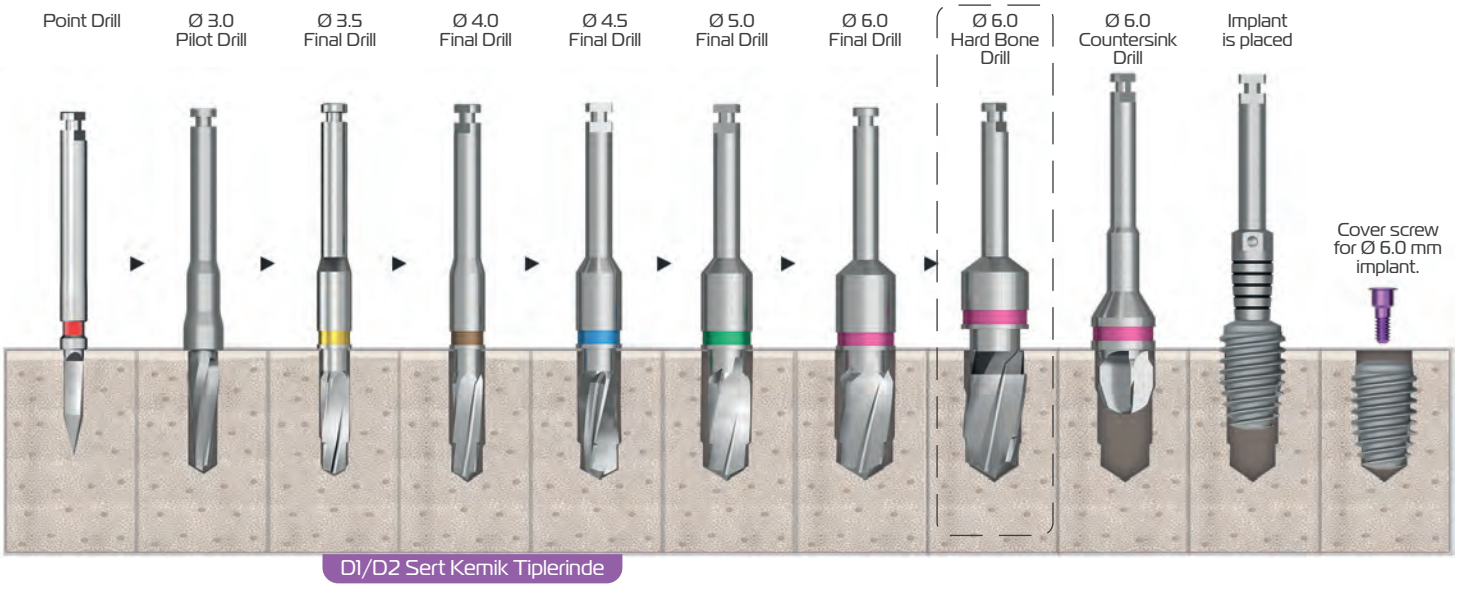

Drill Protocol for T6 TorQ Implants (for L 6.5 mm implants)

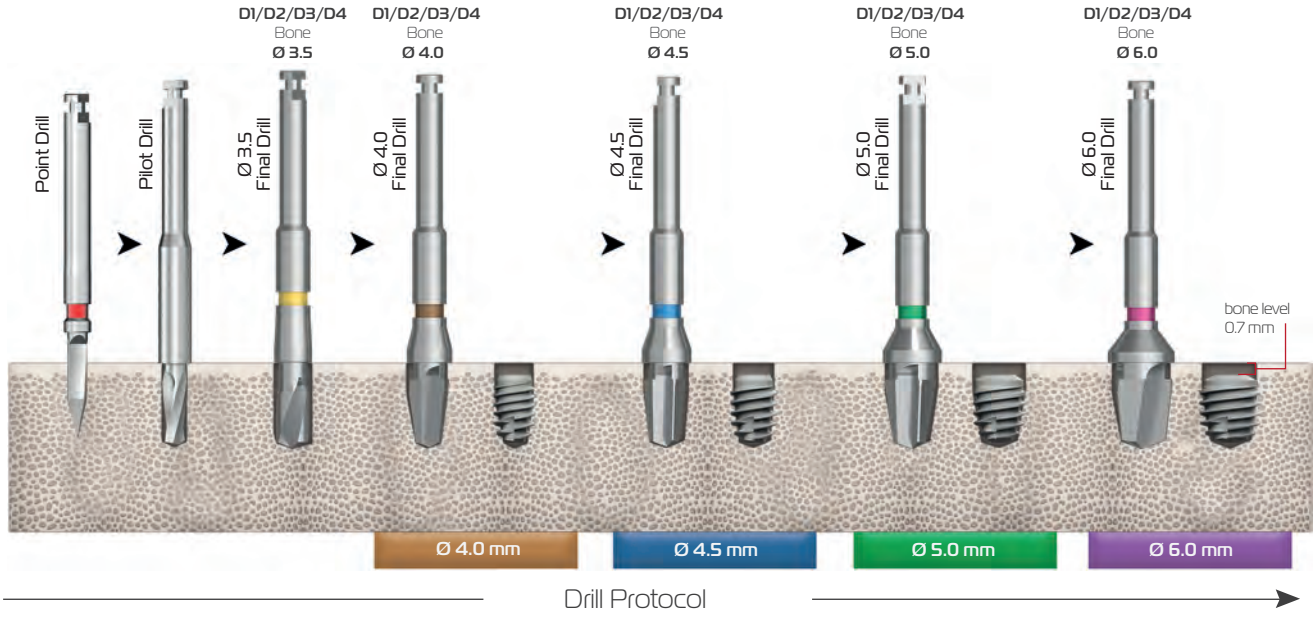

Preparation of the Implant Socket

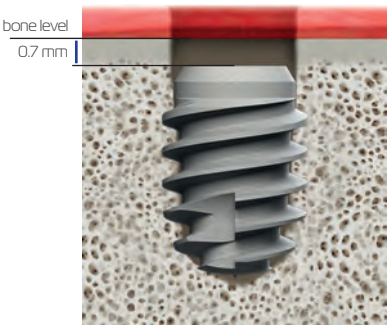

Step 1 : After planning the T6 torq 6.5 mm implant or implants, drilling is performed with a point drill to mark and determine the drill slot axis.

Caution : The point drill makes a slot with a length of 14 mm and a diameter of Ø 2.10 mm.

Step 2 : The final drills for T6 TorQ 6.5 mm implants are the 6.5 mm short implant drills included in the T6 TorQ surgical set. The drills are with stoppers and there are separate drills for each implant diameter.

The slot is gradually enlarged by using other diameter drills and the preparation is completed until the final diameter of the selected implant is reached in the slot opened with a point drill.

The drills should be operated with coolant at a maximum of 800 rpm.

Technical Specifications of T6 TorQ Surgical Kit

Dimensions

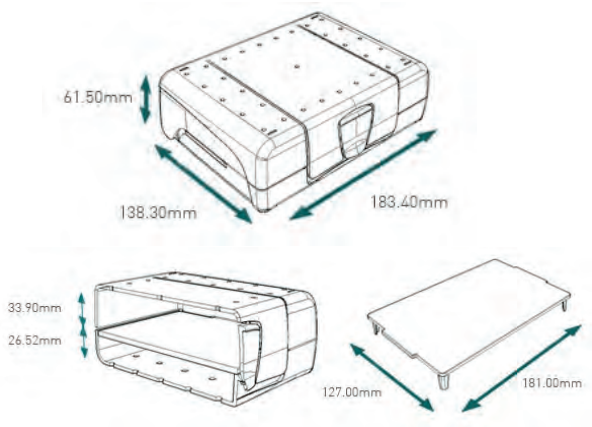

NucleOSS surgical sets are designed in direct collaboration with healthcare practitioners, giving you the best possible match between the ergonomic design of the surgical tray, the surgical instruments it contains and its size.

The surgical set cover can be removed with one easy move.

Lightweight, easy to use, stackable, compact and roomy. It is easy to carry and guarantees the safety of the tools it contains, prevents them from being misplaced during transport.

The surgical set is made of highly impact resistant plastic materials suitable for autoclave sterilization. Plastic raw material can withstand more than 1000 cycles of steam sterilization.

T6 surgical sets consists of two parts, a movable middle shelf where surgical drills and tightening parts are located, and a lower section where torque ratchet and other hand tools are located.

Opening Positions

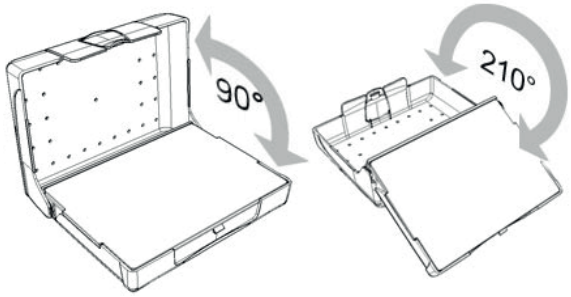

Thanks to its compact and convenient design, it can be sterilized as one piece without having to be taken the parts inside out of the box in clinical autoclave devices.

Set cover can be used in two different positions by being opened 90° or 210°.

When the cover is closed, the parts inside are locked automatically.

Surgical kit consists of drills, parallel pins, neck expanders, hex drivers and hand tools.

Thanks to the flat and embedded type of silicones holding the surgical parts, they are dirt-proof and easy to clean.

Surgical drills are made of high-quality stainless steel, and after heat treatment, they have a long-lasting cutting edge with sharpening techniques.

At the bottom of T6 surgical sets, there are depth gauge, a ratchet and a screwdriver.

T6 TorQ Surgical Kit



T0 25312
Depth Gauge



T0 25900
Torque Ratchet



T0 2022
Screwdriver



Pilot Drill (Ø 3.0)
L: 6,5 mm » T0 25039
L: 8 mm » T0 25043
L: 10 mm » T0 25044
L: 12 mm » T0 25045
L: 14 mm » T0 25046
L: 17 mm » T0 25020

Ø 3.5
L: 6,5 mm » T6 25040
L: 8 mm » TRQ 25145
L: 10 mm » TRQ 25146
L: 12 mm » TRQ 25147
L: 14 mm » TRQ 25148

Ø 4.0
L: 6,5 mm » TRQ 25047
L: 8 mm » TRQ 25087
L: 10 mm » TRQ 25088
L: 12 mm » TRQ 25051
L: 14 mm » TRQ 25089

Ø 4.5
L: 6,5 mm » TRQ 25048
L: 8 mm » TRQ 25090
L: 10 mm » TRQ 25091
L: 12 mm » TRQ 25052
L: 14 mm » TRQ 25092

Ø 5.0
L: 6,5 mm » TRQ 25049
L: 8 mm » TRQ 25093
L: 10 mm » TRQ 25094
L: 12 mm » TRQ 25053
L: 14 mm » TRQ 25095

Ø 6.0
L: 6,5 mm » TRQ 25050
L: 8 mm » TRQ 25096
L: 10 mm » TRQ 25054
L: 12 mm » TRQ 25058

D3/D4 bone drills separate for each diameter and depth

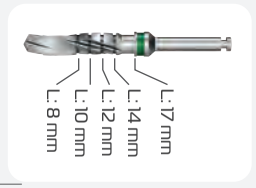

17 mm Hard Bone Drills
(Final) D1/D2
Ø 3.5 T6 25149
Ø 4.0 T6 25059
Ø 4.5 T6 25060
Ø 5.0 T6 25061
Ø 6.0 T6 25062

Countersink (D1/D2/D3/D4)
Ø 3.5 T6 25150
Ø 4.0 T6 25157
Ø 4.5 T6 25158
Ø 5.0 T6 25159
Ø 6.0 T6 25160

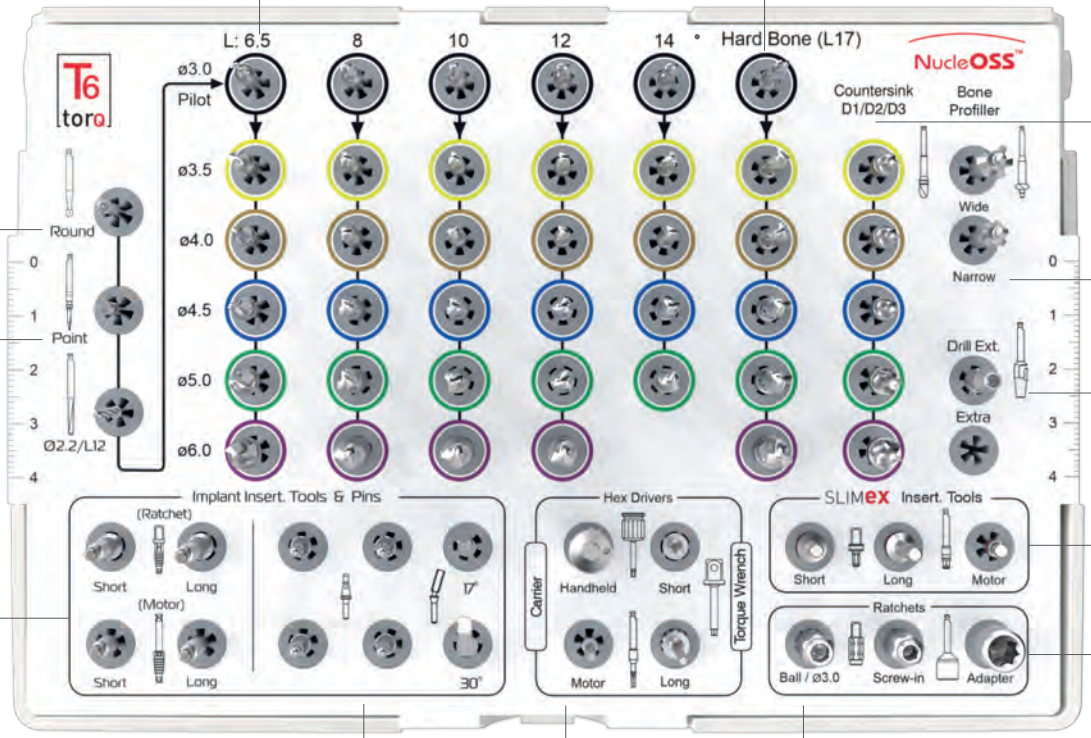

Round Drill
T0 0103

Point Drill
T0 25024

Lindemann Drill
T0 25163

Implant Insertion Tools (with rachet)
T6 25216
T6 25215

Implant Insertion Tools (with micromotor)
T6 25214
T6 25213

Pilot Parallel Pins
T0 25320

Angled pin (17°/30°) for multi unit abutment
T0 25305
T0 25306

Bone Profiller
T0 25064
T0 25032

Drill Extender
T0 2012-1

Slimex Implant Insertion Tools
T0 2008
T0 2005-1
T0 2006-1

Adapter
T0 25212

Hex driver for final torque (rachet)
T0 2024
T0 2025

Hex Driver (manuel) Cover and Gingiva Former Transfer / Tightening
T0 25251

Hex Driver (with micromotor)
T0 2009

Ball Abutment Tightening Part
T0 25205

Multi Unit Abutment Tightening Part
T0 25206

General Info

The parts in the T6 surgical sets are used with the micromotor or the **NucleOSS** ratchet or screwdriver in the surgical kits..

In addition, parts such as connecting screws placed on the implant, implant caps, healing caps or connecting screws placed on the abutment can also be used with the manual hex driver included in the surgical kits.

Caution!
Drills must be correctly attached to the micromotor and should not be operated until they are properly seated.

Point Drill

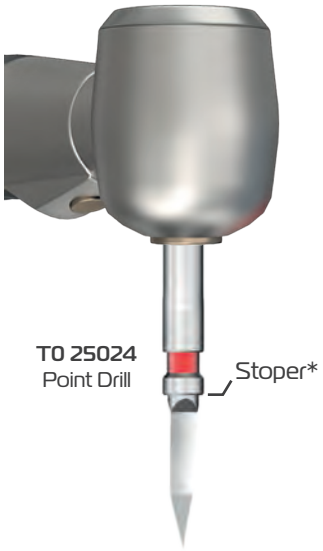

The point drill is used to determine the place where the implant will be placed on the bone and to allow the next drill to advance comfortably.

After the necessary corrections are made with the round drill , the drilling is **first started with the point drill** according to the surgical protocol.

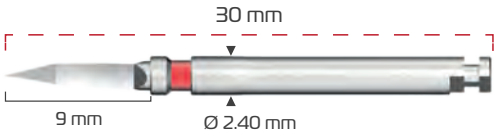

Drill Extender

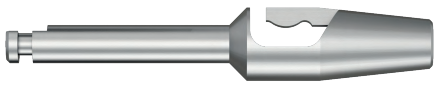

T0 2012-1

- **The drill extender** is used to extend the drill lengths by approximately 16 mm in cases where the drill length is insufficient.

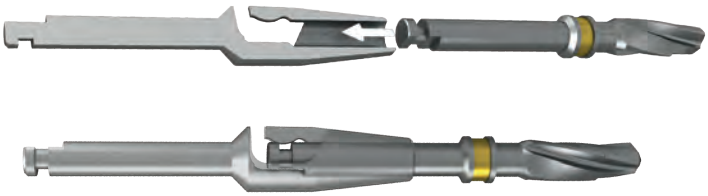

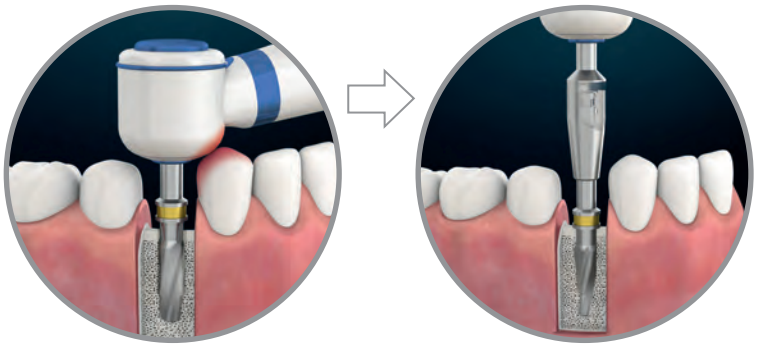

The distance is increased with drill extender in cases where the micro motor is not able to advance in the mesial or distal of the implant area.

Round Drill

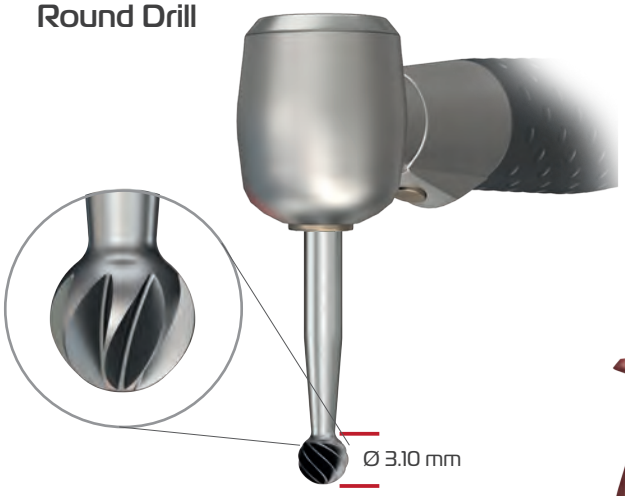

TO 0103
Round Drill

Initial drills are used to prepare the cavity during osteotomy.

- **Round drill** is used to make necessary corrections by filing at the beginning of the osteotomy if the bone surface in the area where the implant will be placed is damaged or irregular.
- **Caution!** Drills must be correctly attached to the micromotor and should not be operated until they are properly seated.

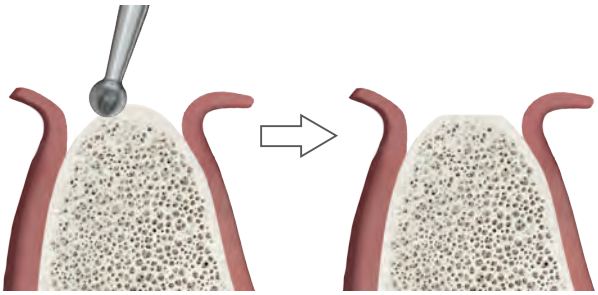

Lindemann Drill

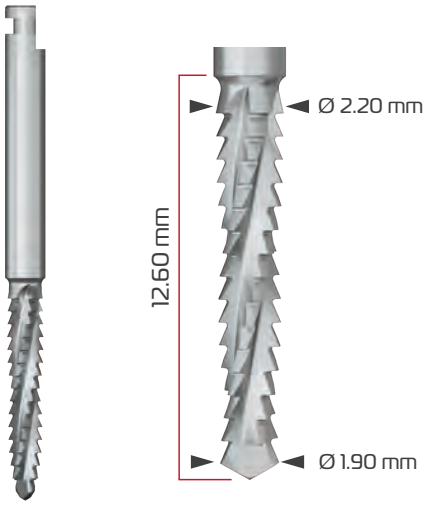

TO 25163
Lindemann
Drill

- **The Lindemann drill,** aggressive side cutting, thanks to its side blades, allows it to cut the bone quickly and transversely instead of perpendicularly.
- It is recommended to use it between 1200-1500 rpm.
- Cooling is absolutely necessary.

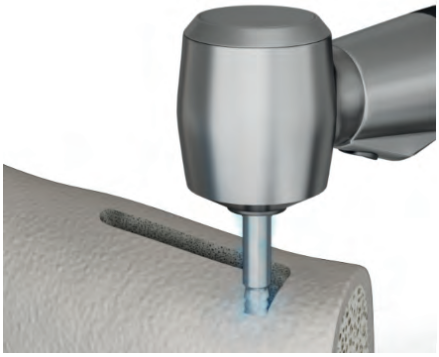

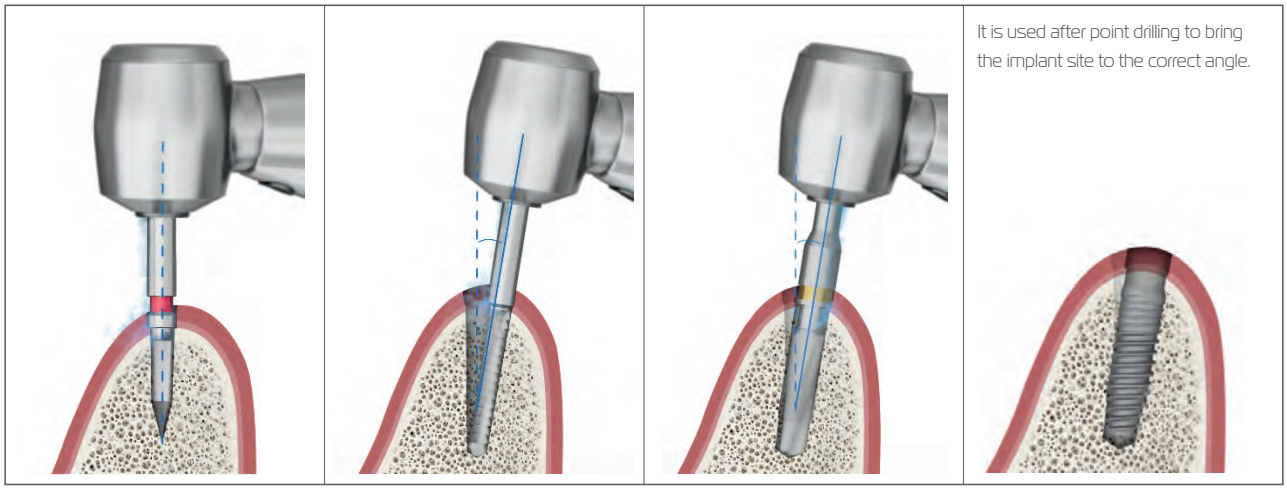

It is used after point drilling to bring the implant site to the correct angle.

Pilot and Final Drills

Pilot Drills (for Ø 3,0 mm implants)

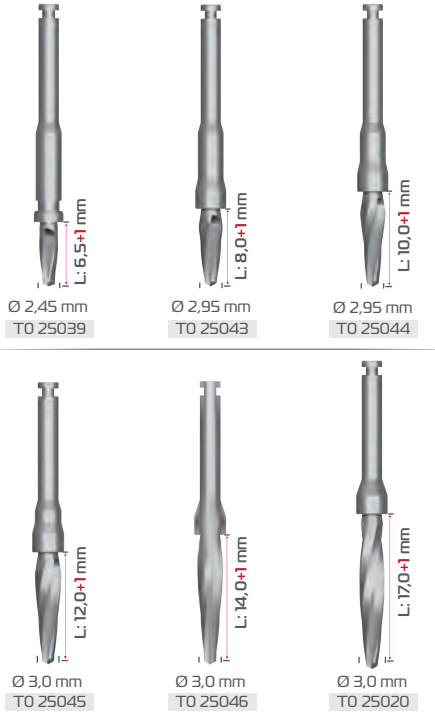

It is the first osteotomy bur that must be used after the initial drills in all surgical drilling protocols to open the implant cavity in the jawbone.

It is one of the parts that are available in both the T6 Standard implant and T6 TorQ implant surgical kits.

It is available in six different sizes, 6.5, 8, 10, 12, 14 and 17 mm.

Drill diameters are as follows and are also used in the drill protocols of narrow implants.

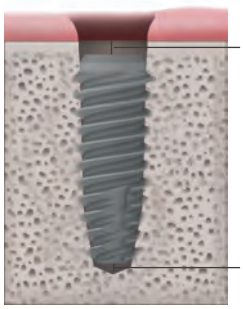

Note: All drill sizes are designed to be 1 mm longer than the implant length to avoid compression in the apex area, while the implants are placed 0.7 mm from the bone level.

T6 TorQ - Final Drills

Osteotomy drills are used to make a suitable cavity for placing implants in the bone.

Drills with stoppers are available in T6 surgical kits for all NucleOSS implant diameters and in five different length options (6.5 - 8 - 10 - 12 - 14 mm).

All drills are designed for use with a micromotor.

All drills are color coded to indicate their diameter.

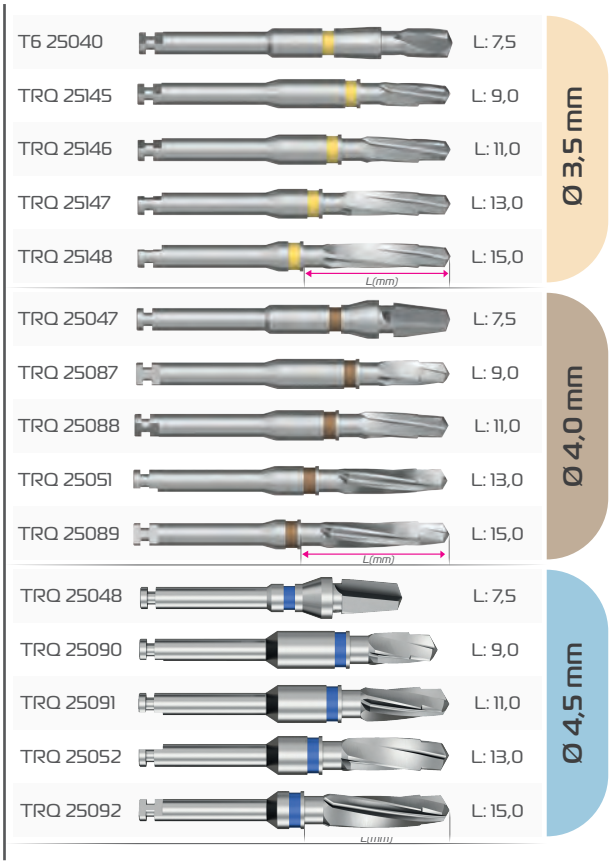



Hard Bone and Countersink Drills

Hard Bone Drills

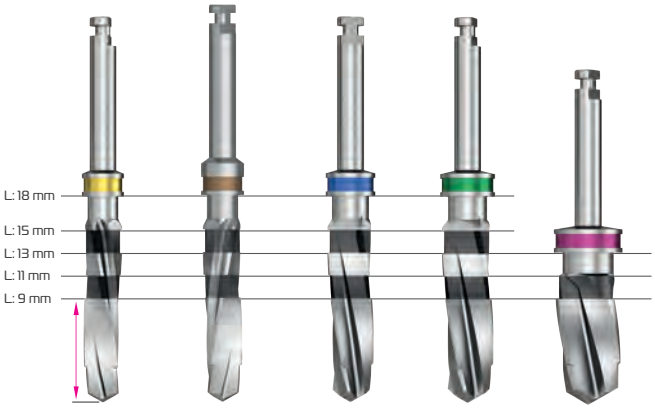

Ø 3,5	Ø 4,0	Ø 4,5	Ø 5,0	Ø 6,0
TRQ 25149	TRQ 25059	TRQ 25060	TRQ 25061	TRQ 25062

It is used after final drills in D1/D2 bone.

Hard bone drills widen the opened cavity by 0.2 mm, allowing the implant to advance more easily in the cavity and reducing the resulting stress.

Hard bone drills are also used in the placement of 17 mm long implants

Even if hard bone drills are used in D1/D2 type hard bones, a countersink should definitely be used afterwards. Otherwise, resorption may occur due to stress.

Drills are approximately 1 mm longer than the implant length.

Countersink Drills

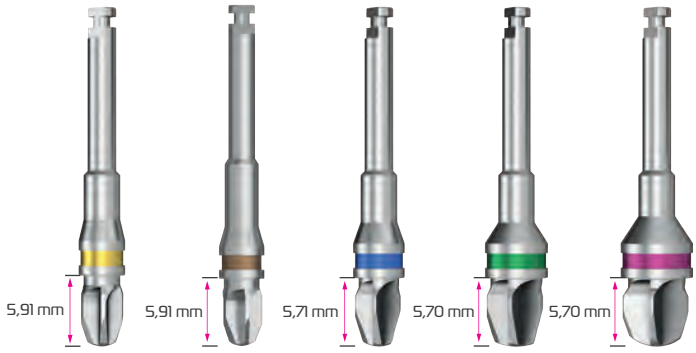

Ø 3,5	Ø 4,0	Ø 4,5	Ø 5,0	Ø 6,0
TRQ 25150	TRQ 25157	TRQ 25158	TRQ 25159	TRQ 25160

It is designed to prevent the implants from getting stuck in the neck area and to provide passive seating.

It must be used to prevent/reduce stress-induced bone resorption in D1/D2/D3 type bones.

The T6 Surgical Kit features various diameter countersinks compatible with the full range of T6 NucleOSS implant diameters

All drills are designed for use with a micromotor.

T6 TorQ Implant - Drill Compatibility

Ø 3,5 Implant ve D2/D3/D4 Bone Drill	Ø 3,5 Implant and D1 Bone Drill
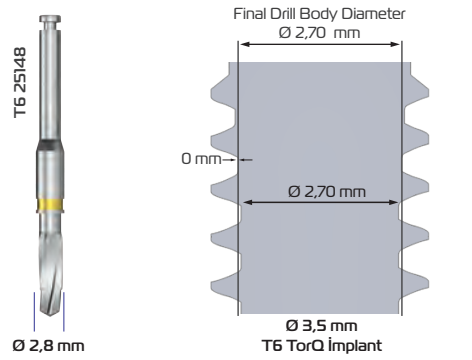	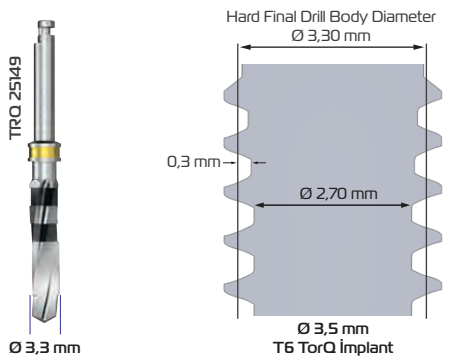
Ø 4,0 Implant ve D2/D3/D4 Bone Drill	**Ø 4,0 Implant and D1 Bone Drill**
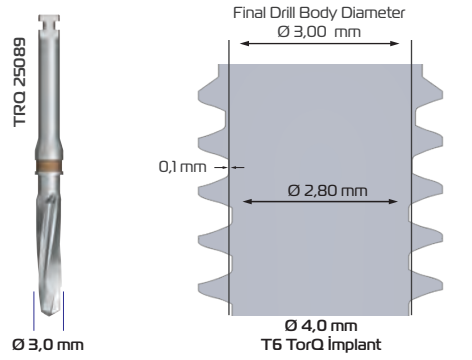	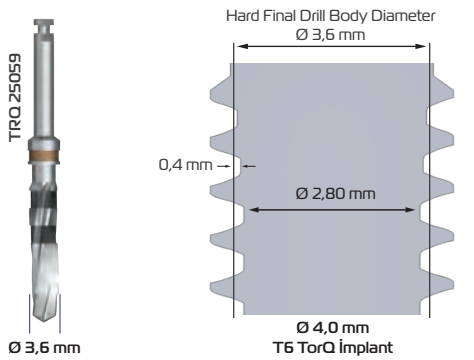
Ø 4,5 Implant ve D2/D3/D4 Bone Drill	**Ø 4,5 Implant and D1 Bone Drill**
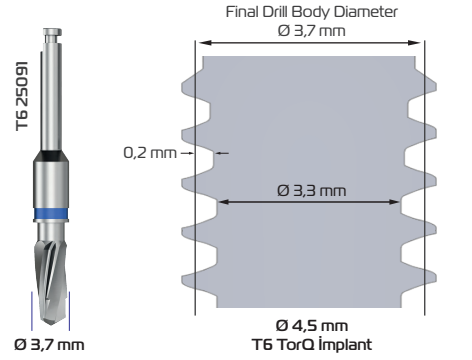	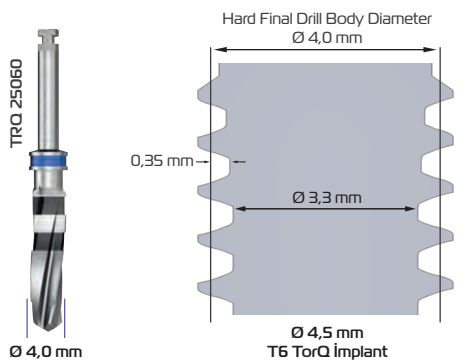

T6 TorQ Implant - Drill Compatibility

Ø 5,0 Implant ve D2/D3/D4 Bone Drill

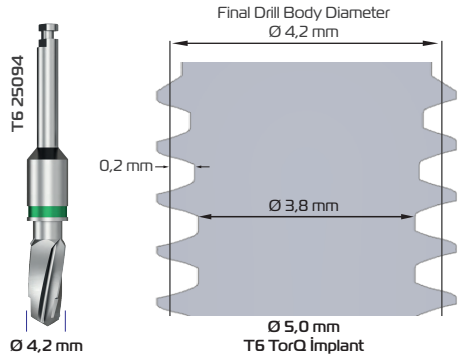

Ø 5,0 Implant and D1 Bone Drill

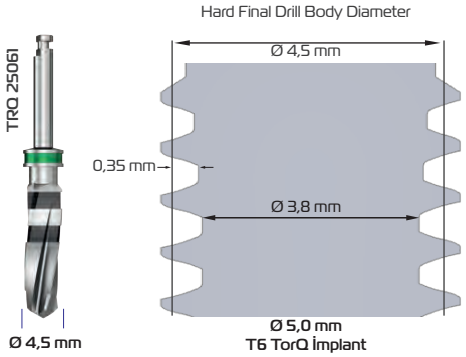

Ø 6,0 Implant ve D2/D3/D4 Bone Drill

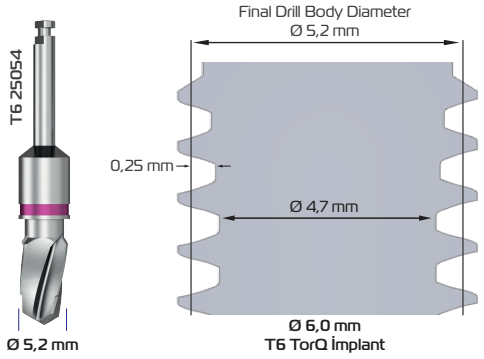

Ø 6,0 Implant and D1 Bone Drill

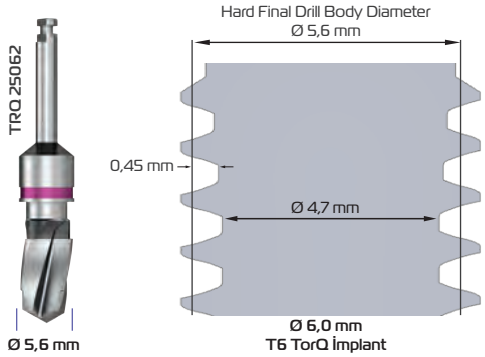

T6 TorQ Implant - Drill Compatibility (for L: 6.5 mm implants)

Ø 4,0 - L 6,5 Implant and D1/D2/D3/D4 bone Drill

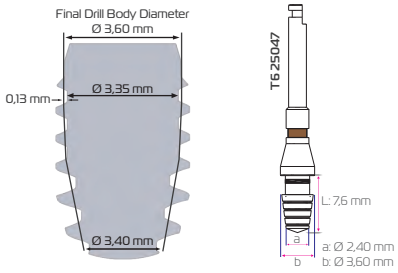

Ø 4,5 - L 6,5 Implant and D1/D2/D3/D4 bone Drill

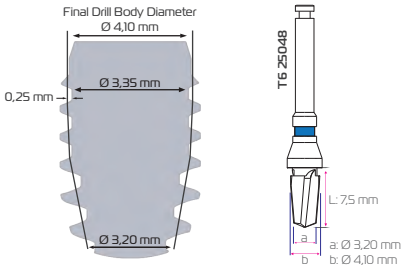

Ø 5,0 - L 6,5 Implant and D1/D2/D3/D4 bone Drill

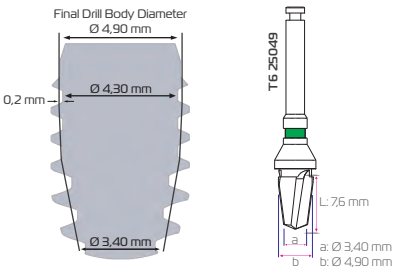

Ø 6,0 - L 6,5 Implant and D1/D2/D3/D4 bone Drill

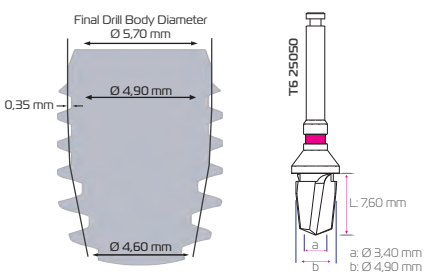

Pilot Parallel Pins

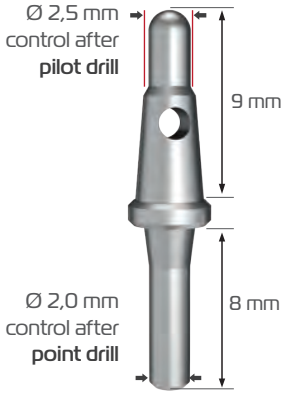

T0 25320

Parallel pins are used to control the parallelism with the adjacent teeth in single implant treatments, and to control the parallelism between the implant cavities during surgical intervention in multiple implant treatments

T6 surgical sets have four parallel pins.

The lower part of the parallel pin is Ø 2 mm and can be used after point drilling.

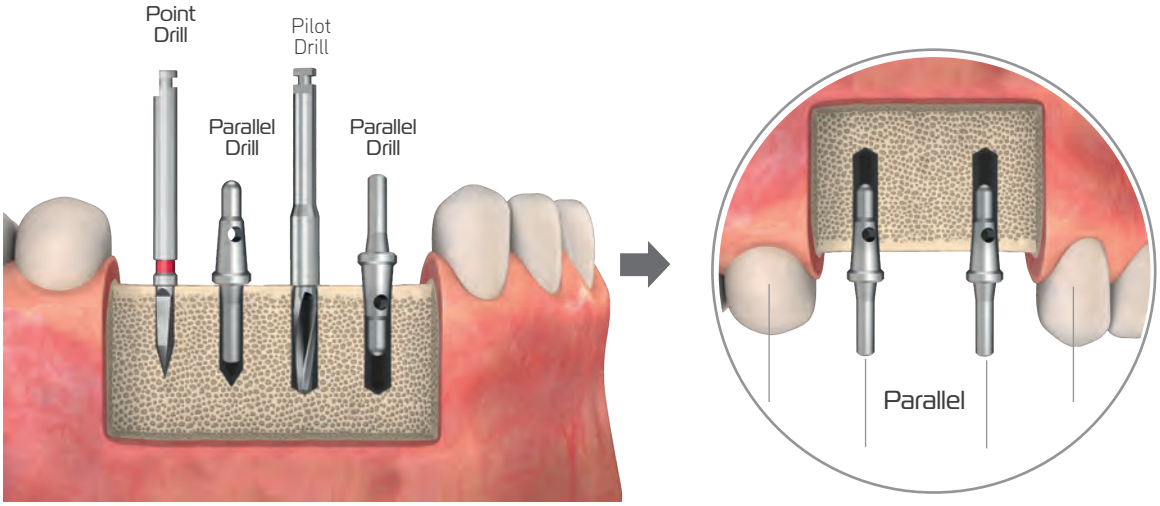

Angled Pins (17° - 30°)

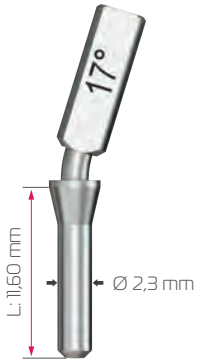

TO 25305

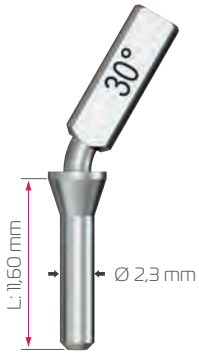

TO 25306

There are two angled parallel pins, 17° and 30°.

It is used to check whether the cavity is opened at the right angle when placing the multi-unit abutments.

It is used after the pilot drill.

Using Angled Parallel Pins



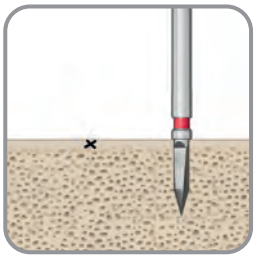

Before using the angled parallel pin, a 90° vertical reference slot is opened by using point > pilot(Ø 3.0mm) drills, respectively, near the point where the implant cavity is planned to be drilled.



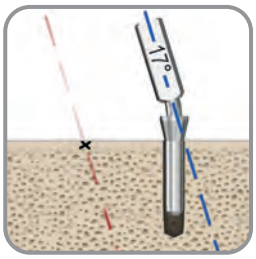

The parallel pin (17°-30°) to be used is placed in the opened reference slot (cavity).

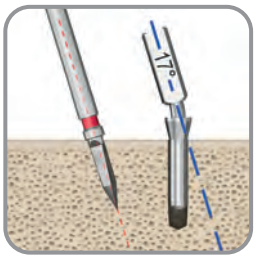

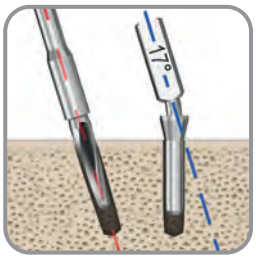

By referring to the parallel pin, starting with point > pilot (Ø 3.0mm) drills to, the slot is opened at the point where the implant will be placed in accordance with the drill protocol and the implant to be used is carefully placed in the slot.



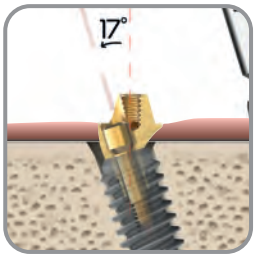

The angled multi-unit abutment is placed on the implant in a way that the platform surface is parallel to the bone surface and attached to the implant with the M.1.6 multi-unit connection screw (16008).

In this way, using an angled parallel pin, the implant is placed in the bone at a right angle. In addition, the platform surface of the abutment placed on the implant is positioned correctly.

Bone Profiler Drill

There should be no spaces!

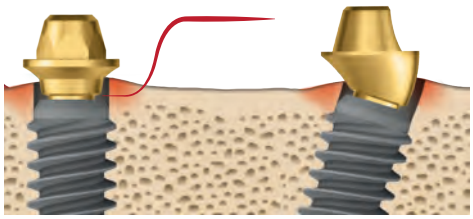

After T6 implants are placed in the implant socket(cavity) in the patient's jawbone, the uneven bone density in the neck area of the implant prevents the abutment from seating on the implant properly. This may cause the abutment or the connecting screw to break in the short or long term.

To solve this problem, the bone profiler drills in surgical kits is used before the abutment is placed.

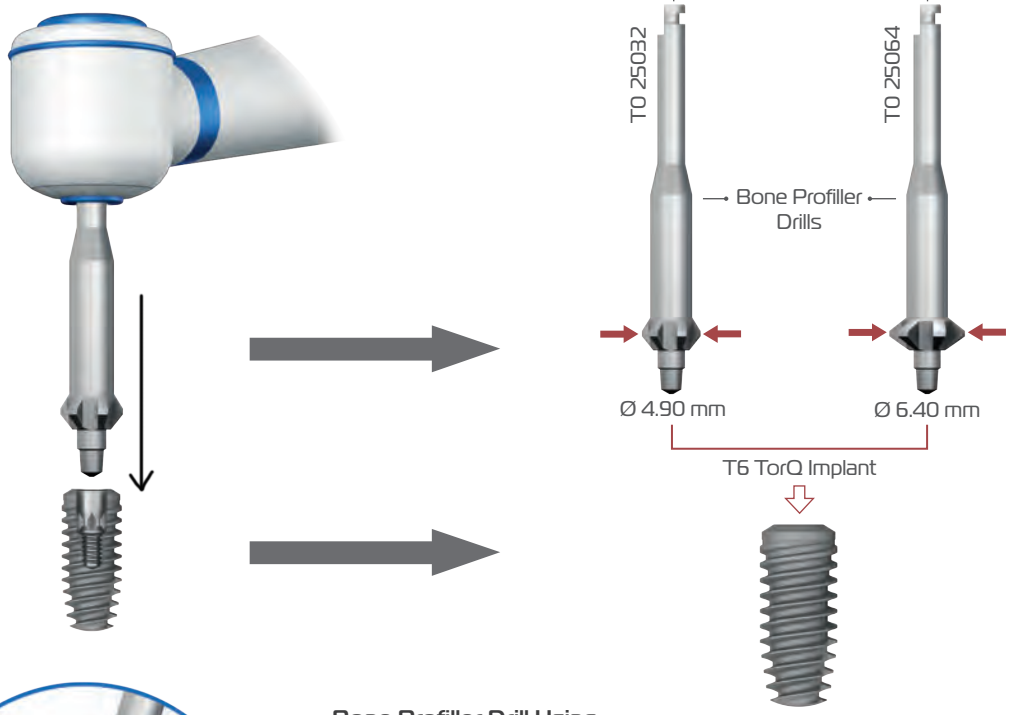

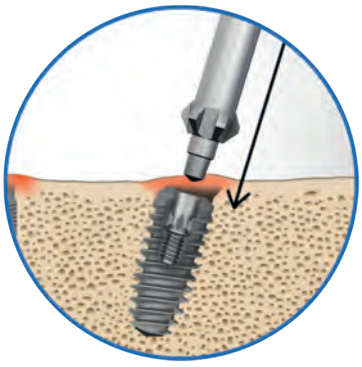

Bone Profiller Drill Using

The uneven bone in the neck of the implant is cleaned by placing the drill (before starting the micromotor) on the guide pin.

Note: At this stage, while the drill is working, the bone surface should be cooled with water.

After the uneven bone is cleaned, the abutment to be used is checked by placing it on the implant.

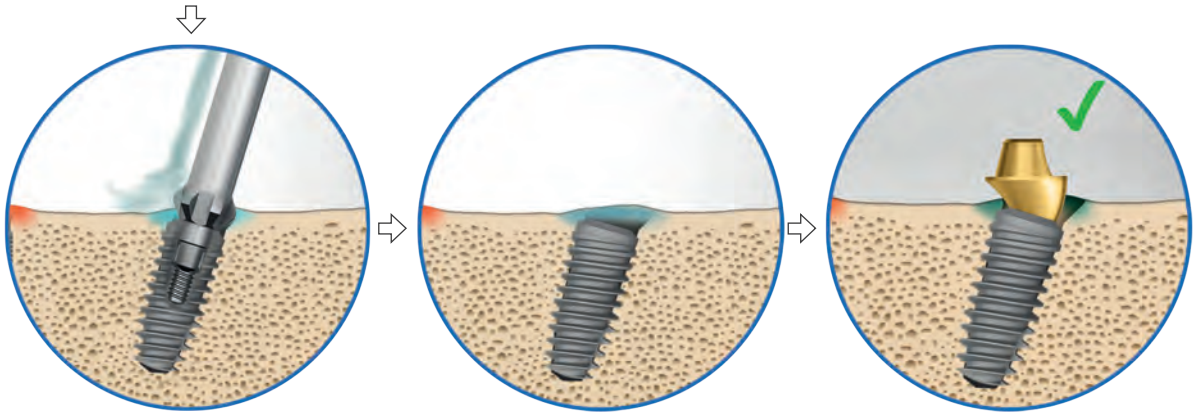

T6 Implant Transfer and Tightening Parts









One of the following T6 transfer/tightening parts is used to transfer the implant from the sterile tube to the surgical site and place the implant.

Ratchet, motor or screwdriver are used in implant transfer/tightening process.

The transfer/tightening partmust fit into the implant **in the exact and correct position.** Otherwise, the implant may fall or damage the hex structure of the implant, as the carrying part cannot provide sufficient contact.

Prior to removing the implant, ensure that **the PEEK ring** on the tip of the component is present

The T6 implant removed from the carrier should be placed in the implant socket opened according to the protocol in the patient's mouth as soon as possible without being touched anything.

While the T6 implant is placed with a micro motor at a maximum speed of 15 rpm or with a manual hex driver, it is placed by being turned clockwise so that the upper surface of the implant is 0.7 mm below the bone level.

⚠ By applying pressure on the transfer/tightening part during insertion, the part should be prevented from coming out of the hex socket.

Contribution of the Position of the Implant in the Socket to the Impression Process

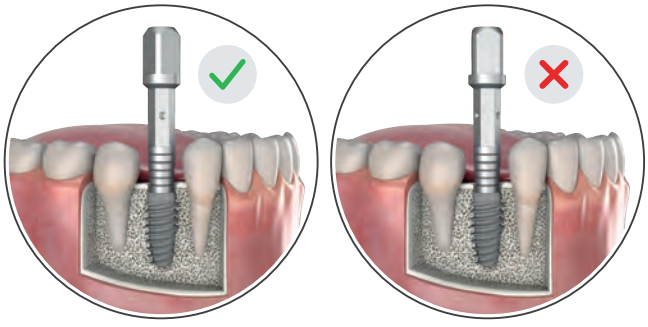

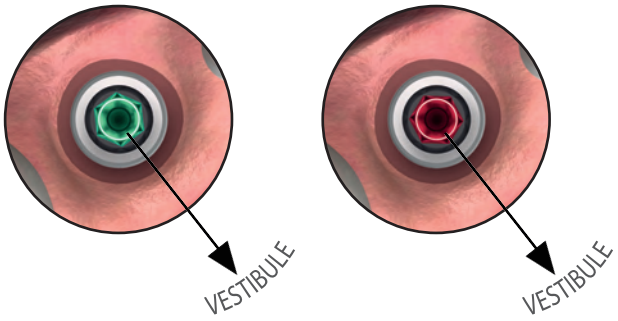

In order for standard abutments to be positioned correctly, the dots of the carrying and tightening part must face the vestibule direction of the teeth when placing T6 implants. Thus, the flat surface of the Hex structure will be in the vestibule direction of the teeth.

It is used to determine the angle direction in angled abutments. Implant hex direction is important because the hex flat surface faces the angle axis.

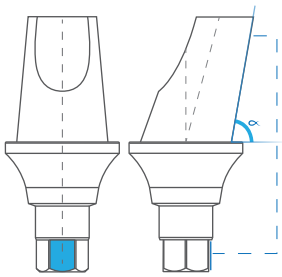

⚠ The angled axis point out the flat of Hex connection structure.

If the dots on the carrying and tightening parts are not taken into consideration, the Hex plane of the implant will face the mesial or distal direction of the teeth, and will cause the standard abutment to be positioned incorrectly.

Hex Driver - Transfer

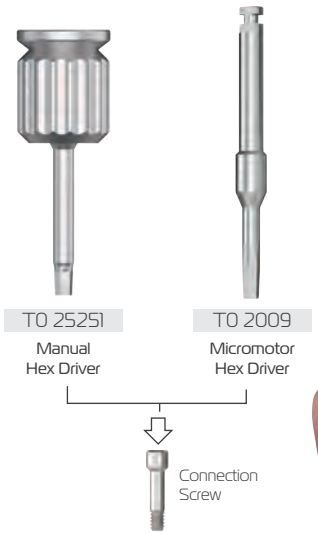

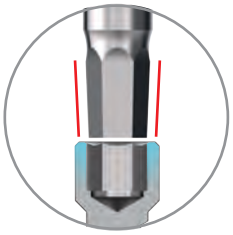

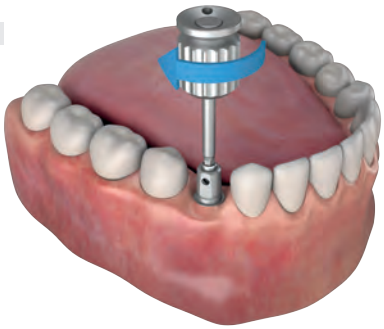

Hex driver is used for fixing healing components, prosthetic and impression parts.

It is made of stainless-steel material.

It can be procured in a surgical set and in one piece.

The tip of the hex drivers used manually and with micromotor is in hex structure and conical shape.

It can be used for carrying connecting screws and healing caps and for light tightening.

Torque up to a **maximum of 10 Ncm** can be made with these hex driver.

Note: Final torque must never be done. Because the hex slot of the screw or the tip of the hex driver may be damaged.

Hex Driver (torque)

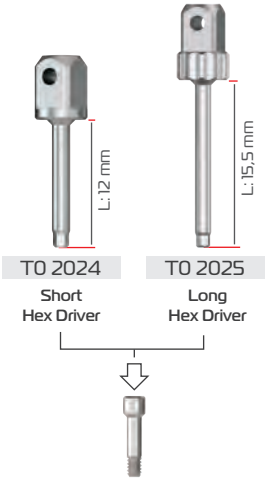



The screw is held with a hex driver and placed on the part it will be fixed to. The hex driver is gently turn clockwise to tighten the screw.

Tightening drivers are used for fixing healing components, prosthesis and impression parts.

It is used with a ratchet

It is made of stainless-steel material.

It can be procured in a surgical set and in one piece

The tip of the hex driver used for final torque is straight. It is only used for torque with NucleOSS ratchet.

It has no retention, it is not used for carrying.





The ratchet is carefully seated on the hex driver.

The screw is tightened by turning the ratchet clockwise. By following the torque values specified at the end point, the desired torque value is set and the tightening process is completed.

Multi Unit Abutment Tightening Part

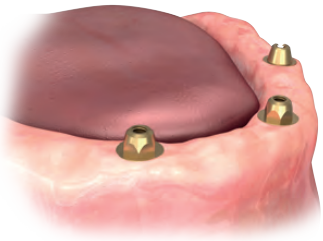

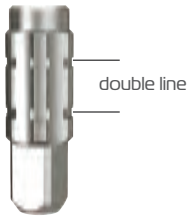

TO 25206

Threaded abutment tightening part is used to place multi unit straight abutments on T6 implants.

It is made of stainless steel.

It can be used with a ratchet or screwdriver.

Multi-unit straight abutment has a threaded connection structure. When placing the abutment on the implant, attention should be paid to the tightening and torque values.

⚠ **Attention :** Multi unit straight abutment should be torqued to a maximum of 30 Ncm when being placed on the abutment!

If the torque value is less or more than the specified value, loosening or breakage of the abutment may occur.



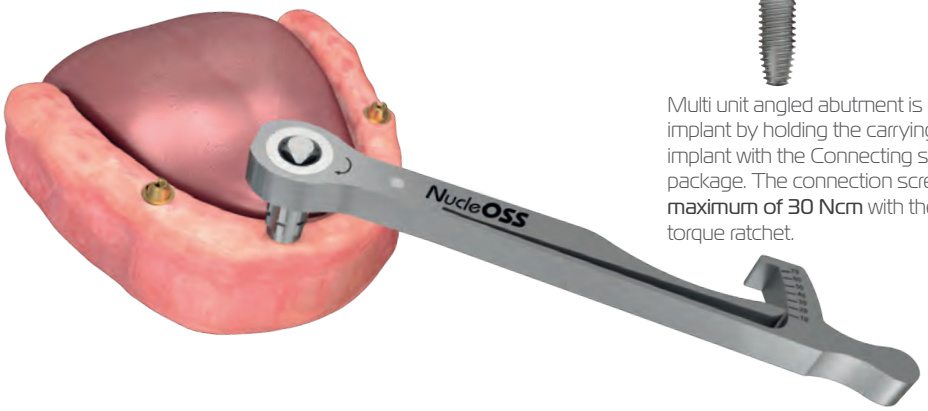

Multi unit angled abutment is carefully placed on the implant by holding the carrying part and fixed to the implant with the Connecting screw included in the package. The connection screw should be torqued to a **maximum of 30 Ncm** with the help of a NucleOSS torque ratchet.

Ball Abutment Tightening Part (O-Ring)

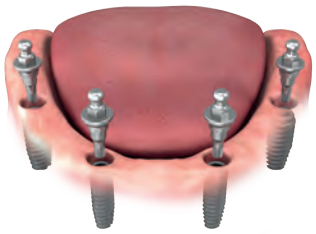



TO 25205

Ball abutment tightening part is used to place ball abutments on a T6implant.

They are made of stainless steel.

It can be used with a ratchet or screwdriver.

The ball abutment is carefully inserted into the implant. **The ball abutment tightening part** is used to fix the abutment to the body.

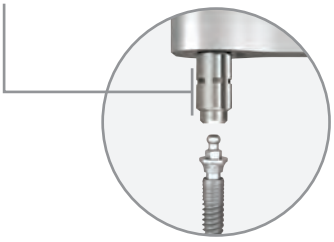



Ball abutment should be torqued to a **maximum of 30 Ncm** using the NucleOSS ratchet.

Adapter



TO 25205

O-ring Abutment Tightening Part



TO 25206

Multi Unit Abutment Tightening Part



TO 25212

Adapter

An adapter is used in cases where Multi Unit and O-ring support clamping parts need to be used with a micromotor.



bottom view



cutaway

Adapter - the using with multi unit abutment tightening part

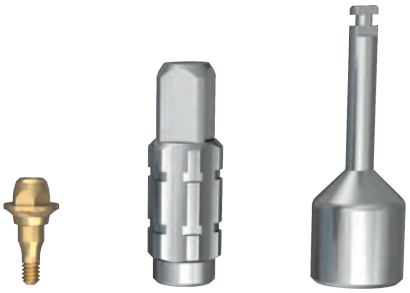

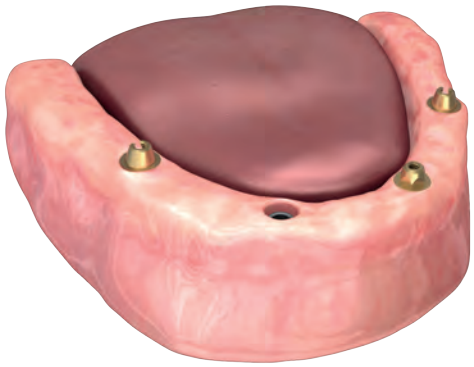

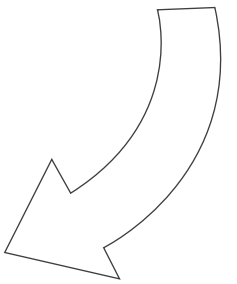

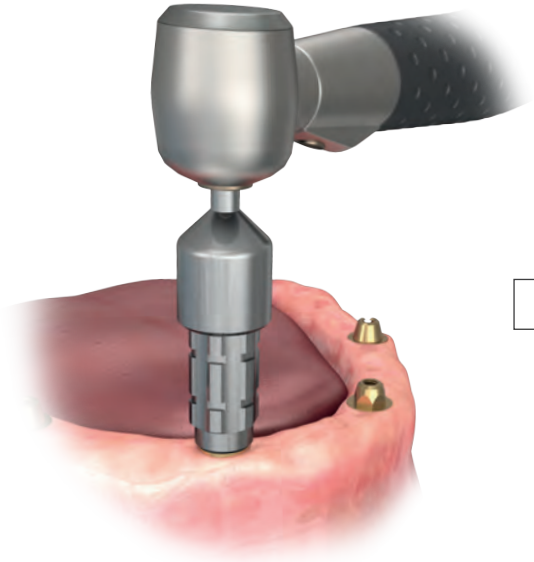

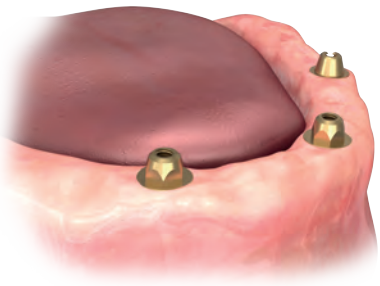

Slimex Implant Carrying/Tightening Parts



T0 2008
with micromotor



T0 2005-1
with ratchet / long



T0 2006-1
with ratchet / short

Parts of T6 Standard and T6 TorQ surgical kits are used in **Slimex** implant surgery and prosthetic stages.

The PEEK ring located at the tip of the insertion drivers prevents the implant from falling off during transfer.

Therefore, before using, make sure that the PEEK ring is in its place and undamaged.

Ratchet



Screwdriver



Micromotor

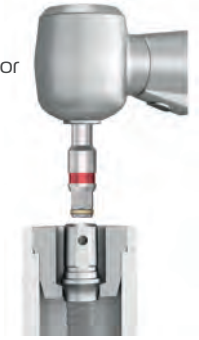

Slimex Transfer/Tightening parts are included in T6 surgical kits.

CRH-109
T6 Standard Surgical Kit



CRH-115
T6 Torq Surgical Kit





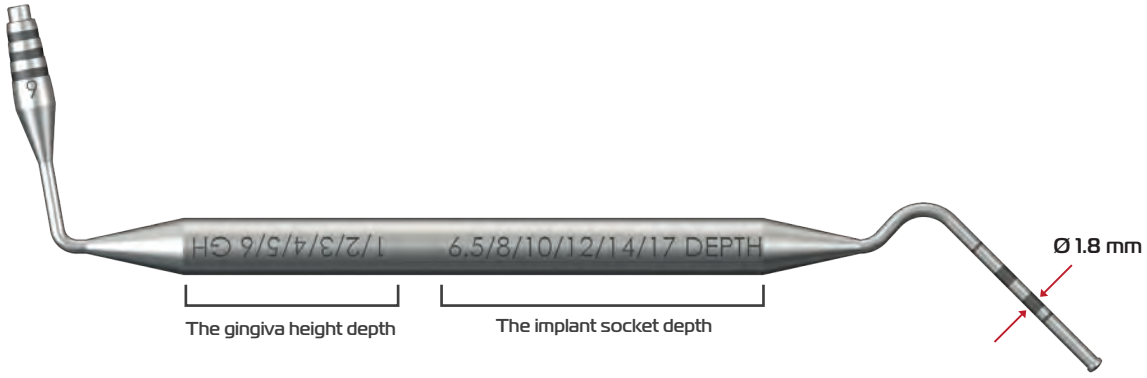



The thin part of the depth gauge is used to measure the depth of the opened slot after the pilot drills in the implant site opening process.

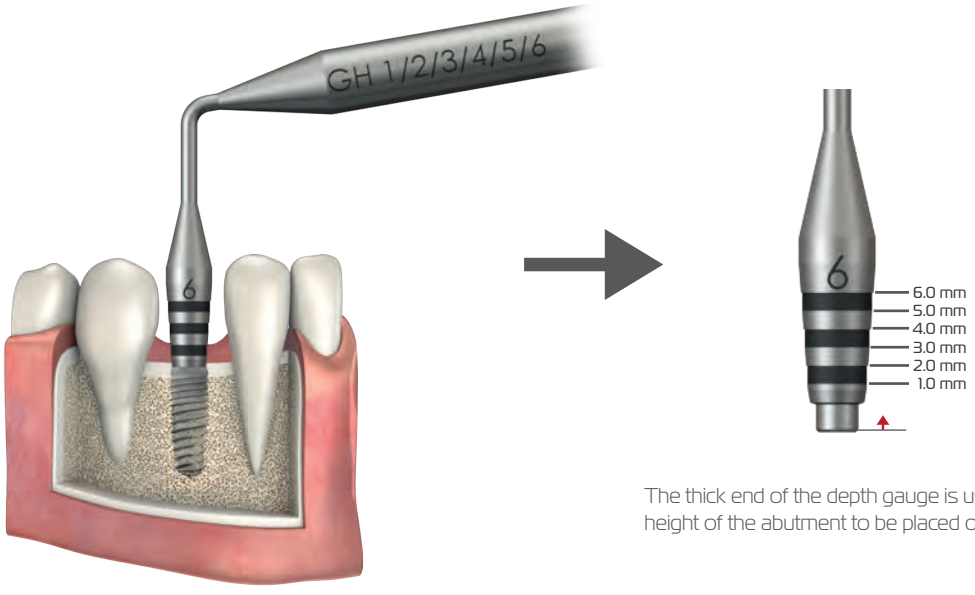

The thick end of the depth gauge is used to determine the gingival height of the abutment to be placed on the implant.

Screwdriver

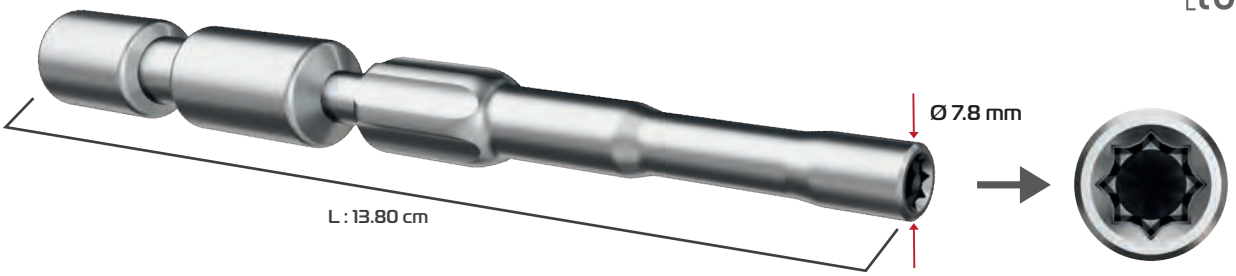

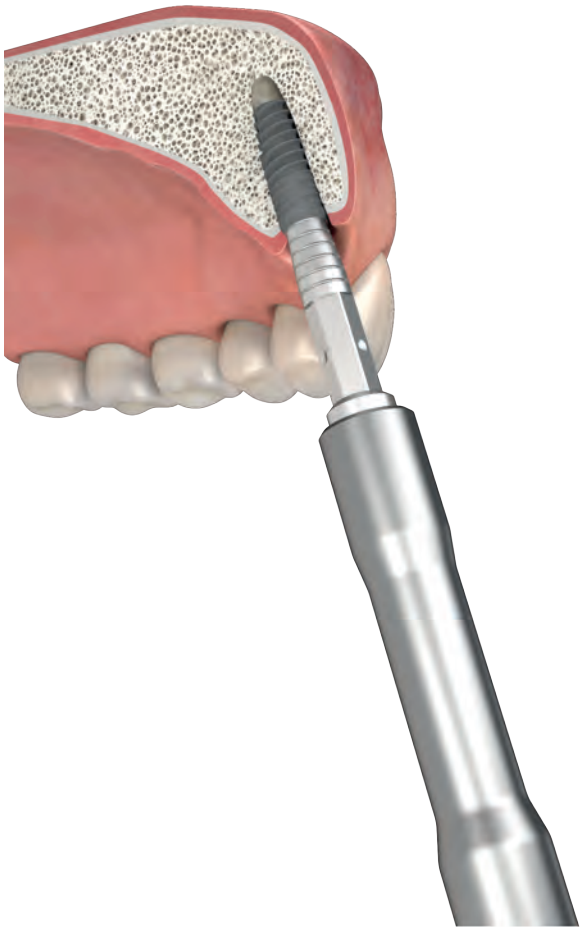

In the use of screwdrivers, implant carrying-tightening parts, hex keys, screw-retained and ball abutment clamping parts, NucleOSS is offered as an alternative to the ratchet.

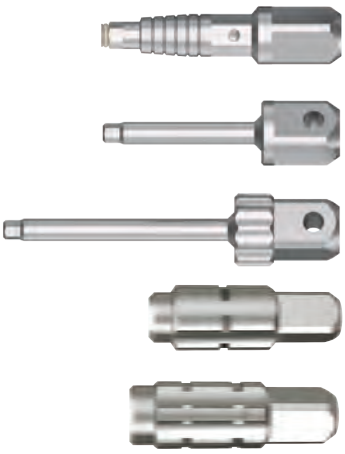

Implant Carrying-Tightening Part

Hex Driver (short)

Hex Driver (long)

O-Ring Abutment Tightening Part (ball)

Screw-Retained Tightening Part

The screwdriver provides convenience in placing the implant or tightening the screws in the maxilla-anterior region.

The transfer and tightening process can be done with a screwdriver.

Make sure the screwdriver is aligned with the axis of the socket.

Otherwise, the implant may be damaged or the transfer part may break.

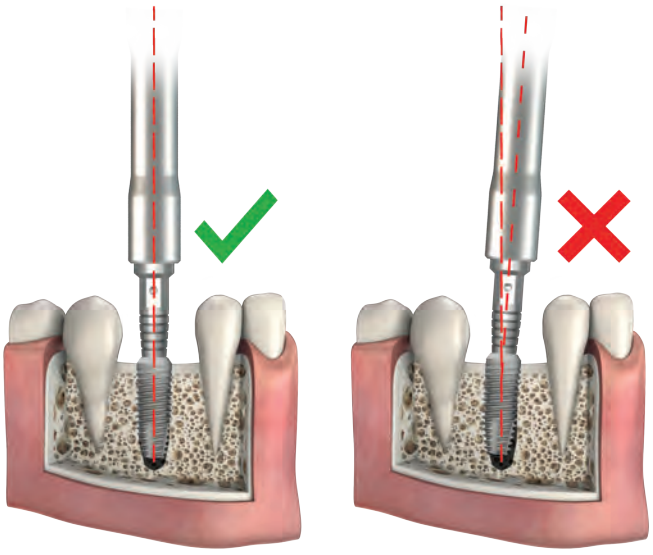

Racthet



The torque value of the NucleOSS ratchet is from 0 Ncm to 70 Ncm.

When the needle is at the top, it shows about 80 Ncm.

The ratchet is used by NucleOSS to tighten all the abutments and screws at the torque values specified in the product catalogs.

It is made of stainless-steel material.

It can be procured in a surgical set and in one piece.





Using as Torqueless Ratchet;

Hold the torque arm and torque needle together. Press down on the wheel with your finger to hold the ratchet in place.

Caution! Direction arrow should point to the top during tightening and to the bottom during untightening.



Using as Torque Ratchet:

Press down on the wheel with your finger to hold the ratchet in place. Then pull the torque arm lightly in the direction of the arrow until you reach the desired torque value.

Caution! The torque arm should not be turned more than the torque values specified on the ratchet. Otherwise, the torque will be incorrect. Direction arrow should point to the top during tightening and to the bottom during untightening

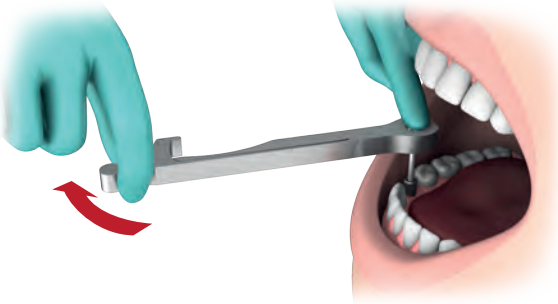

Using Ratchet for Removal:

Use the ratchet with the direction arrow facing down.

Tightening - Torque Values



T0 25900

Products	Tightening Parts	Torque Value
Implant Cover Screw And Sinus Caps 	 T0 2024 Short (ratchet) T0 2025 Long (ratchet)  T0 25251 Manual Hex Driver	MANUAL/ Ratchet (If a racquet is used, 10 Ncm)
Gingiva Former 		
Connection Screws of Peek Parts 		
All Cemented Abutment Screws 	 T0 2024 Short (ratchet) T0 2025 Long (ratchet)  T0 25251 Manual Hex Driver	Max. 30 Ncm
Cast Abutment Screws 		
Cad/Cam Ti-Base Abutment Screws 		

Tightening - Torque Values



T0 25900

Product	Tightening Parts	Torque Value
Ball Abutment 	 T0 25205 Ball Abutment Tightening Part	Max. 30 Ncm
Equator Abutment 	 774CHE Equator Abutment Tightening Part	Max. 30 Ncm
Multi Unit Straight Abutments 	 T0 25206 Multi Unit Abutment Tightening Part	Max. 30 Ncm
Multi Unit Angled (17° / 30°) Abutment Screws 	 T0 2024 Short (ratchet)  T0 2025 Long (ratchet)  T0 25251 Manual Hex Driver	Max. 30 Ncm
Parts Installed on the Multi Unit 		Max. 10 Ncm
Occlusal Screws Attached to Prosthesis 		Max. 20 Ncm
Occlusal Screws Attached to Prosthesis 		Max. 20 Ncm

- Careful use of all tools is extremely important.
- Even the slightest damage to the ends of the drill adversely affects cutting performance and therefore the clinical outcome.
- Even if it is used correctly and clean, it should be taken into account that the cutting performance of the drill is reduced after a certain number of uses. (Maximum milling for NucleOSS drills is 15 times)
- Avoid contact with the ends of the drills on a hard surface other than the bone.
- Each surgical set piece should be used according to its purpose and method of use. Other uses may damage the part.
- Never allow surgical residues (blood, bone, etc.tissue residues) to dry on an tool, clean immediately after surgery.
- Clean thoroughly with only soft brushes so as not to cause wear and scratches on the tools. If necessary, remove the removable parts of the tools and clean the gaps.
- Never disinfect, clean (also ultrasound) or sterilize instruments made of different materials together.
- Use only cleaning agents and disinfectants for the material and follow the manufacturer's instructions for use.
- Rinse disinfectants and cleaning agents thoroughly with water.
- Never leave or store tools moist or wet.
- For more detailed information, please refer to the D006 NucleOSS Surgical Instruments User Manual for Cleaning and Disinfection of Surgical Instruments.

Sterilization

Şanlılar Medical Devices Med. Kim. San Tic. A. Ş. accepts no responsibility for devices initially delivered non-sterile, regardless of who performs the sterilization or by what method. Due to variations in conditions and environments, the ultimate responsibility for implementing and verifying procedures to achieve sterility rests with the user. Non-sterile surgical instruments should not be used under any circumstances.

Place properly cleaned and dried instruments into the designated slots inside the surgical set box. The surgical set is made of highly impact-resistant plastic materials suitable for autoclave sterilization. In clinical autoclaves, parts can be sterilized as a single piece without having to be removed from the box. Place the surgical set container in the autoclave bag.

Note: Do not stack boxes while performing the sterilization process, as this may affect sterilization effectiveness.

Sterilisation cycle recommended by Şanlılar Medical Devices :

Method	Moist heat sterilization according to ISO 17665:2024.
Cycle	Prevacuum
Temperature	134°C / 273.2°F
Exposure Time	3 Minutes
Basınç	2.2 bar
Pre-Vacum	3 times < 60 mbar
Minimum Drying Time	60 minutes in the enclosed chamber.

- Remove the surgical sets from the sterilizer after the cycle is complete, and place the tray on a padded surface to prevent condensation during cooling.

Note: Sterilization processes are validated in accordance with the current international standard, ISO 17665:2024.

Note: Manufacturer instructions for use for all detergents/cleaning solutions and/or equipment and accessories used in the cleaning and disinfection of the devices must be strictly followed.

Storage Conditions and Symbol Explanations

Storage Instructions

After sterilization, store the devices in a dry, dark place, such as a closed cupboard or drawer.

Symbol Explanations

The symbols found on all Nucleoss products are as follows:

REF Product catalog number	EU REP Authorized representative	LOT Product lot number	UDI Unique device identifier
MD Medical device	CC Manufacturer country	Manufacturer	Read the user manual.
STERILE R Gamma sterilization	2 STERILIZE Do not re-sterilize	2 Don't reuse	NON STERILE Not sterile
Double sterile barrier system	60% 40% Humidity range	28°C 18°C Temperature range	MR MR Conditional
Distributor	Dispersive	Do not use if the packaging is damaged.	Warnings
CE Conformity European	# Model number	Rx only For prescription use only.	7440-02-0 Ni Contains hazardous materials

- The CE mark is the manufacturer's declaration that the product meets the requirements of the applicable Medical Device Regulation (MDR) (EU) 2017/745.
- Where applicable: The identification number of the Notified Body shall follow this symbol.

NucleOSS™

SANLILAR

Şanlılar Tıbbi Cihazlar Med. Kim. San. ve Tic. A.Ş.
İTOB Organize Sanayi Bölgesi İTOB Atatürk Caddesi No:24
Tekeli/Menderes/İZMİR/TÜRKİYE
T: +90 232 799 03 04 F: +90 232 799 03 06

www.NucleOSS.com

EC REP SLH Microtech GmbH
Tiergartenstr. 7b ,64646
Heppenheim (Bergstr.), GERMANY

CE 2975

Notes

NucleOSS™

Notes

NucleOSS™

NucleOSS™

Şanlılar Tıbbi Cihazlar
Med. Kim. San. ve
Tic. A.Ş.

İTOB Organize Sanayi Bölgesi İTOB
Atatürk Caddesi No:24
Tekeli/Menderes/İZMİR/
TÜRKİYE

T : +90 232 799 03 04
F : +90 232 799 03 06
E : info@nucleoss.com

SLH Microtech GmbH
Tiergartenstr. 7b , 64646
Heppenheim (Bergstr.),
GERMANY

T : +49 (0) 6252 795 77 72
F : +49 (0) 6252 795 77 73
E : europe@nucleoss.com